HITACHI DOT MATRIX LCD MODULES

HITACHI

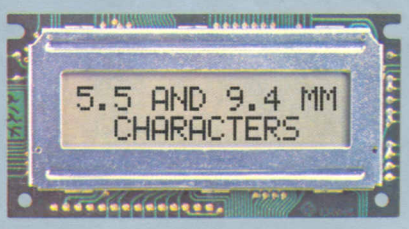

PROMELECT
P.O. Box 56310, Pinegowrie
2123
Tel. 789-1400

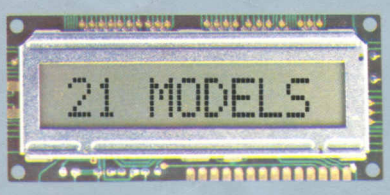

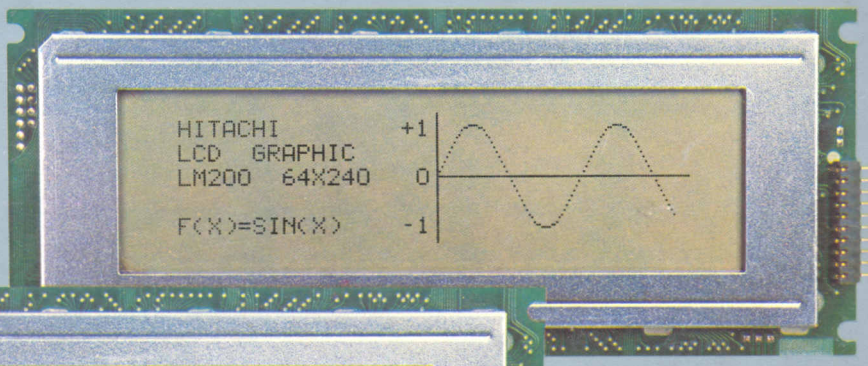

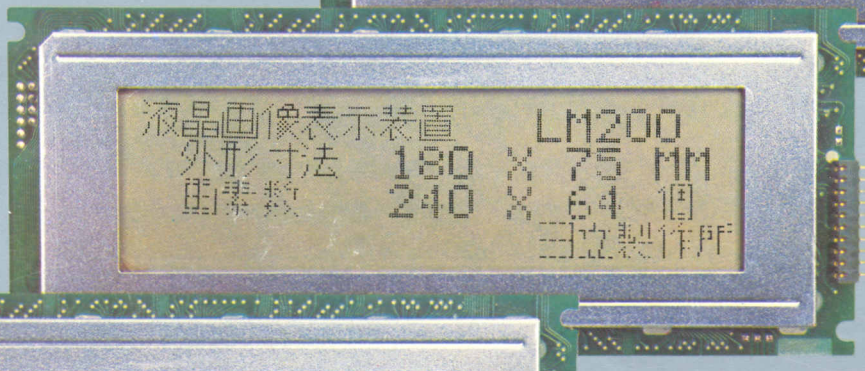

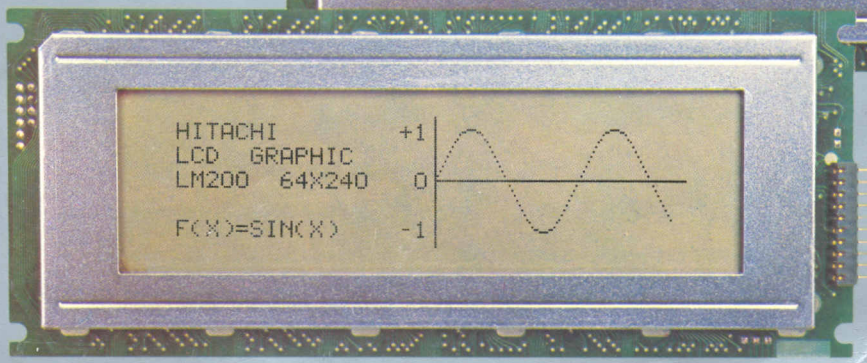

PREFACE

Hitachi Dot Matrix Liquid Crystal Display (LCD) Module was developed to display numerals, alphabet, symbols, graphics, etc.

The twist-nematic type liquid crystal, with a high contrast ratio was used. Due to its small size, light weight, low voltage, low power consumption, easy handling, etc., the Hitachi Dot Matrix LCD Module has been widely used as a display component for portable data terminal equipment, word processors and high class electronic tabletop calculators in Japan and abroad.

This brochure describes the electrical and optical characteristics, external dimensions and precautions in handling the 21 standard type of products, and it can be used when selecting equipment.

Note: The information contained herein is tentative and may be changed without prior notices. It is therefore advisable to contact Hitachi before processing with the design of equipment in corporating this product.

CONTENTS

PREFACE 2
FEATURES 4
APPLICATIONS 4
TABULATED DATA FOR HITACHI DOT MATRIX LIQUID CRYSTAL DISPLAY MODULE 4
OPTICAL DATA 6
HANDLING PRECAUTIONS 6
CONTROL LSI HD43160 A 7
CONTROL LSI HD44780 (LCD-II) 7

1. CONTROL LSI ATTACHMENT TYPE LCD MODULE
H2532A 12
H2535 14
H2538A 16
H2539 18
H2555 21
H2568 23

2. BUILT-IN CONTROL LSI TYPE LCD MODULE
H2570 26
LM015 28
LM027 31
H2571 34
H2572 37
LM016 40
LM032 43
LM017 46
LM018 49
LM041 52

3. GRAPHIC LCD MODULE
HD61380 55
H2525 56
LM200 59
LM021 62

4. LARGE CHARACTER LCD MODULE
LM054 65
LM038 68

5. INDUSTRIAL LCD's 71

6. MICROPROCESSORS FOR LCD MODULES 73

FEATURES:

1. By the combination of dots, numerals, alphabets, symbols, graphics, etc. can be displayed.
2. Due to the twist-nematic type liquid crystal, bright and high-contrast displays can be obtained.
3. Due to low drive voltage and low power consumption, this LCD module may be operated by battery.
4. An LSI is loaded exclusively for the LCD element drive. Also, a type containing a control LSI is available.
5. Due to its small size and light weight, compact display equipment can be constructed.
6. Various types are available, from small-sized modules for character display, to large-sized display module for graphics.

APPLICATIONS:

- Portable data terminal equipment
- Word processor
- High class electronic tabletop calculator
- POS terminal equipment
- Measuring instruments
- Other display devices

TABULATED DATA FOR DOT MATRIX LCD MODULES

Type No.	No. of display character	External dimension W x H x T (mm)	Effective viewing area W X H (mm)	Character dimension W X H (mm)	Driving method Duty-Bias	Recommended power supply V_{DD} - V_{SS} (V)	Recommended power supply V_{EE} - V_{SS} (V)
H2532A	16 x 1 line	84.0 x 44.0 x 15 max.	61 x 15.8	2.9 x 5.5	1/8D - 1/4B	+5	−5
H2535	16 x 2 lines	84.00 x 44.0 x 15 max.	61 x 15.8	2.9 x 4.1	1/16D - 1/5B	+5	−5
H2538A	40 x 1 line	220.0 x 50.0 x 15 max.	163 x 17	3.15 x 5.5	1/8D - 1/4B	+5	−5
H2539	40 x 2 lines	220.0 x 50.0 x 15 max.	163 x 17	3.15 x 4.45	1/16D - 1/5B	+5	−5
H2555	40 x 1 line	227.0 x 38.5 x 15 max.	160 x 17	3.15 x 5.5	1/8D - 1/4B	+5	−5
H2568	40 x 1 line	227.0 x 38.5 x 15 max.	163 x 17	3.15 x 7.9	1/12D - 1/4B	+5	−5
H2570	16 x 1 line	80.0 x 36.0 x 12 max.	64.5 x 13.8	3.15 x 7.9	1/11D - 1/4B	+5	–
LM015	16 x 1 line	80.0 x 36.0 x 12 max.	64.5 x 13.8	3.15 x 5.5	1/8D - 1/4B	+5	–
LM027	24 x 1 line	126.0 x 36.0 x 12 max.	100.0 x 13.8	3.15 x 7.9	1/11D - 1/4B	+5	–
H2571	32 x 1 line	174.5 x 31.0 x 13.4 max.	132.5 x 14	3.15 x 7.9	1/11D - 1/4B	+5	–
H2572	40 x 1 line	182.0 x 33.5 x 13 max.	154.4 x 15.8	3.15 x 7.9	1/11D - 1/4B	+5	–
LM016	16 x 2 lines	84.0 x 44.0 x 15 max.	61 x 15.8	2.95 x 4.85	1/16D - 1/5B	+5	−5
LM032	20 x 2 lines	116.0 x 37.0 x 13 max.	83 x 18.6	3.2 x 4.85	1/16D - 1/5B	+5	−5
LM017	32 x 2 lines	174.5 x 31.0 x 13.4 max.	141.19 x 16.75	3.45 x 4.85	1/16D - 1/5B	+5	−5
LM018	40 x 2 lines	182.0 x 33.5 x 13 max.	154.4 x 15.8	3.2 x 4.85	1/16D - 1/5B	+5	−5
LM041	16 x 4 lines	87.0 x 60.0 x 14 max.	61.8 x 25.2	2.95 x 4.15	1/16D - 1/5B	+5	−5
LM054	8 x 1 line	84.0 x 44.0 x 15 max.	61 x 15.8	6.7 x 9.4	1/8D - 1/4B	+5	–
LM038	20 x 1 line	182 x 33.5 x 13 max.	154.4 x 15.8	6.7 x 9.4	1/8D - 1/4B	+5	–
H2525	20 dot x 239 dot	220.0 x 53.0 x 15 max.	163 x 17	Graphic	1/20D - 1/5.5B	+5	−5
LM200	64 dot x 240 dot	180.0 x 75.0 x 15 max.	132 x 39	Graphic	1/32D - 1/6.7B	+5	−5
LM021	24 dot x 479 dot	290.0 x 60.0 x 13 max.	245 x 19	Graphic	1/24D - 1/6B	+5	−5

Power consumption typ. (mW)	Operating temperature (°C)	Storage temperature (°C)	Weight (g)	LSI for LCD driving (Built-in)	Recommend. control LSI	Remarks	Page
10	0 ~ +50	−20 ~ + 60	40	HD44100	HD43160A		12
10	0 ~ +50	−20 ~ +60	40				14
10	0 ~ +50	−20 ~ +60	100				16
10	0 ~ +50	−20 ~ +60	100				18
10	0 ~ +50	−20 ~ +60	100				21
10	0 ~ +50	−20 ~ +60	100				32
10	0 ~ +50	−20 ~ +70	25	HD44780 and HD44100	Built-in	Single power supply	26
10	0 ~ +50	−20 ~ +70	25				28
10	0 ~ +50	−20 ~ +70	40				31
10	0 ~ +50	−20 ~ +70	60				34
10	0 ~ +50	−20 ~ +70	65				37
15	0 ~ +50	−20 ~ +70	25				40
15	0 ~ +50	−20 ~ +70	50				43
15	0 ~ +50	−20 ~ +70	60				46
15	0 ~ +50	−20 ~ +70	65				49
15	0 ~ +50	−20 ~ +70	60	HD44780/104			52
10	0 ~ +50	−20 ~ +70	25	HD44780		Single power supply	65
15	0 ~ +50	−20 ~ +70	65	HD44780/100			68
10	0 ~ +50	−20 ~ +60	100		HD61830	Full dot type	56
20	0 ~ +50	−20 ~ +60	150				59
20	0 ~ +50	−20 ~ +60	150	HD44100			62

OPTICAL DATA

Item	Symbol	Condition	min.	typ.	max.	Unit	Note
Viewing area	$\phi 2-\phi 1$	K=1.4	20	–	–	deg.	1, 2, 8
Contrast ratio	K	$\phi=25°$ $\theta=0°$	–	3	–	–	3
Response time (rise)	t_r	$\phi=25°$ $\theta=0°$	–	200	400	ms	4, 5
				250	400		4, 6
				150	250		4, 7
Response time (fall)	t_f	$\phi=25°$ $\theta=0°$	–	200	400	ms	4, 5
				250	400		4, 6
				150	250		4, 7

Note 1. Definition of θ and ϕ

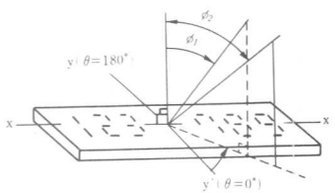

Note 2. Definition of viewing angle $\phi 1$, and $\phi 2$

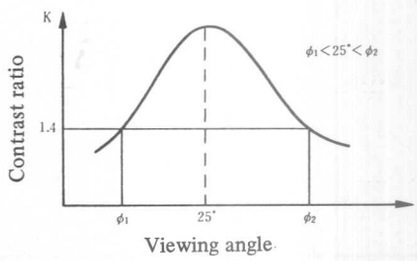

Note 3. Definition of contrast "K"

$$K = \frac{\text{Brightness of non-selected segment } (B_2)}{\text{Brightness of selected segment } (B_1)}$$

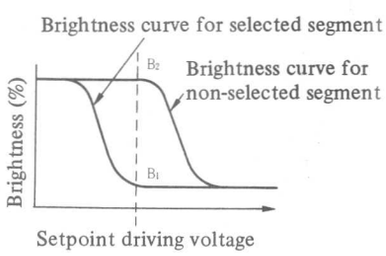

Note 4. Definition of optical response

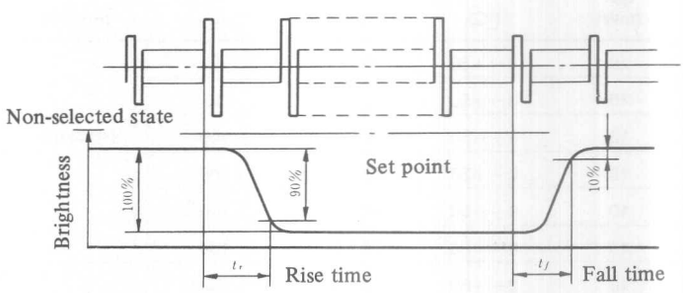

Note 5. Applied type: H2532A · H2535 · H2538A · H2555 · H2568

Note 6. Applied type: H2539 · H2570 · LM015 · LM027 · H2571 · H2572 · LM016 · LM032 · LM017 · LM018 · LM041 · LM 054 · LM 038

Note 7. Applied type: H2525 · LM200 · LM021

Note 8. Viewing area of LM200: typical 20deg.

HANDLING PRECAUTIONS

PACKAGE

1. If the display surface is dirty, wipe lightly with degreased cotton or chamois and benzine.
2. The glass may be broken or cracked. Special care should be taken when handling.
3. The polarization plate can be easily damaged. Glasses and tweezers must not be set.

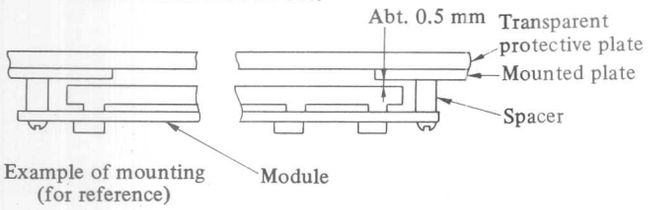

STRUCTURE

1. As shown in the figure, the module is fixed by using the PC board setting holes. When mounting, special care should be given to the following points:
   (1) For protection of the polarization plate and the liquid crystal cell, the protection plate made of acryl, etc. should be installed.
   (2) Installation should be performed with a clearance of 0.5 mm between the module and the setting plate to prevent module cover damage. When camber or twist force is great, the liquid crystal cell will be under stress, hence the spacer height tolerance should be ±0.1 mm.

2. As this module is provided with C-MOS LSI, the care to take such a precaution as to grounding the operator's body is required when handling it.

OPERATION CAUTIONS

1. If the liquid crystal drive voltage (Vo) exceeds the designation, its service life will be shortened, consequently the module should be used within the designated range.
2. When DC voltage is applied, electrical and chemical reactions are generated which will shorten the service life; so when an M signal is input from the outside, the duty must be 50 ±1%. (For the M signal, refer to the interface timing chart of each type.)
3. If the operation temperature is lower than designated, the ON/OFF operation becomes slower. If the temperature is higher than designated, the display color becomes blue-black. However, when the temperature returns normal, the display also returns normal.
4. The liquid crystal drive voltage (Vo) should be adjusted to obtain an optimal contrast.

CONTROL LSI HD43160A

1. The HD43160A is a CMOS LSI developed to control the LCD module described below, and contains a character generator and character data memory.
   Applied type: H2532A, H2535, H2538A, H2539, H2555, and H2568.
   Example of a connection between HD43160A and LCD module.

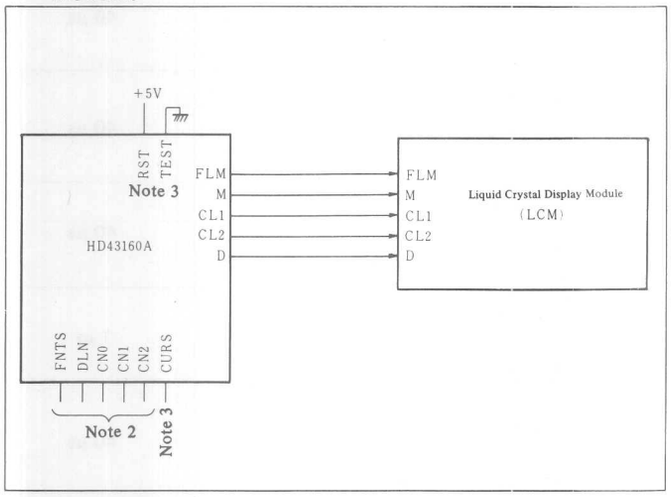

2. For details, refer to "HITACHI DOT MATRIX LIQUID CRYSTAL DISPLAY CONTROLLER IC HD43160".

Note 1: When CURS = "1", the cursor has a 5 x 1 dot constitution. (■■■■■)
When CURS = "0", the cursor has a 1 x 1 dot constitution. (□□■□□)

Note 2: Treatment examples for all types are shown in the table below.

0: GND
1: V_{DD} (+5V)

Type No. \ Terminal	FNTS	DLN	CN0	CN1	CN2
H2532A	0	0	0	1	0
H2535	0	1	0	0	1
H2538A	0	0	1	0	1
H2539	0	1	1	1	1
H2555	0	0	1	0	1
H2568	1	0	1	0	1

Note 3: The test terminal is fixed at the "0" level.
The RST terminal is normally at the "1" level.
When set at the "0" level, oscillation is stopped and DC voltage is loaded to the liquid crystal.

CONTROL LSI HD44780 (LCD-II)

The control LSI HD44780 is contained in the following LCD modules. The LCD modules below are compact and easy to use.
Several instructions can be found on page 8, and a comparison of the character code and the character pattern is shown on page 9.

1. LCD modules containing the control LSI HD44780
   H2570, H2571, H2572, LM015, LM027, LM016, LM032, LM017, LM018, LM041, LM054, LM038.

For details, refer to "HITACHI MICROCOMPUTER SYSTEM: DOT MATRIX LIQUID CRYSTAL DISPLAY CONTROLLER & DRIVER LCD-II (HD44780) USER'S MANUAL".

INSTRUCTIONS

Applied type: H2570, H2571, H2572, LM015, LM027, LM016, LM032, LM017, LM018, LM041, LM054, LM038

Instruction	Code										Description	Execution time (when fosc is 250 KHz)
	RS	R/W	DB7	DB6	DB5	DB4	DB3	DB2	DB1	DB0		
Clear display	0	0	0	0	0	0	0	0	0	1	Clears all display and returns the cursor to the home position (Address 0).	82 μs~1.64 ms
Return home	0	0	0	0	0	0	0	0	1	*	Returns the cursor to the home position (Address 0). Also returns the display being shifted to the original position. DD RAM contents remain unchanged.	40 μs~1.6 ms
Entry mode set	0	0	0	0	0	0	0	1	I/D	S	Sets the cursor move direction and specifies or not to shift the display. These operations are performed during data write and read.	40 μs
Display ON/ OFF control	0	0	0	0	0	0	1	D	C	B	Sets ON/OFF of all display (D), cursor ON/OFF (C), and blink of cursor position character (B).	40 μs
Cursor and display shift	0	0	0	0	0	1	S/C	R/L	*	*	Moves the cursor and shifts the display without changing DD RAM contents	40 μs
Function set	0	0	0	0	1	DL	N	F	*	*	Sets interface data length (DL) number of display lines (L) and character font (F).	40 μs
Set CG RAM address.	0	0	0	1	A_{CG}						Sets the CG RAM address. CG RAM data is sent and received after this setting.	40 μs
Set DD RAM address	0	0	1	A_{DD}							Sets the DD RAM address. DD RAM data is sent and received after this setting.	40 μs
Read busy flag & address	0	1	BF	AC							Reads Busy flag (BF) indicating internal operation is being performed and reads address counter contents.	1 μs
Write data to CG or DD RAM	1	0	Write Data								Writes data into DD RAM or CG RAM.	40 μs
Read data to CG or DD RAM	1	1	Read Data								Reads data from DD RAM or CG RAM.	40 μs
	I/D = 1: Increment I/D = 0: Decrement S = 1: Accompanies display shift. S/C = 1: Display shift S/C = 0: Cursor move R/L = 1: Shift to the right. R/L = 0: Shift to the left. DL = 1: 8 bits DL = 0: 4 bits N = 1: 2 lines N = 0: 1 line F = 1: 5 x 10 dots F = 0: 5 x 7 dots BF = 1: Internally operating BF = 0: Can accept instruction										DD RAM: Display data RAM CG RAM: Character generator RAM A_{CG} CG RAM address A_{DD}: DD RAM address Corresponds to cursor address. AC: Address counter used for both of DD and CG RAM address.	Execution time changes when frequency changes. (Example) When fosc is 270 KHz: $40\ \mu s \times \frac{250}{270} = 37 \mu s$	

* Don't care

For details, refer to "HITACHI MICROCOMPUTER SYSTEM: DOT MATRIX LIQUID CRYSTAL DISPLAY CONTROLLER & DRIVER LCD-II (HD44780) USER'S MANUAL".

FONT TABLE

1. Applied type: H2570, H2571, H2572, LM027.

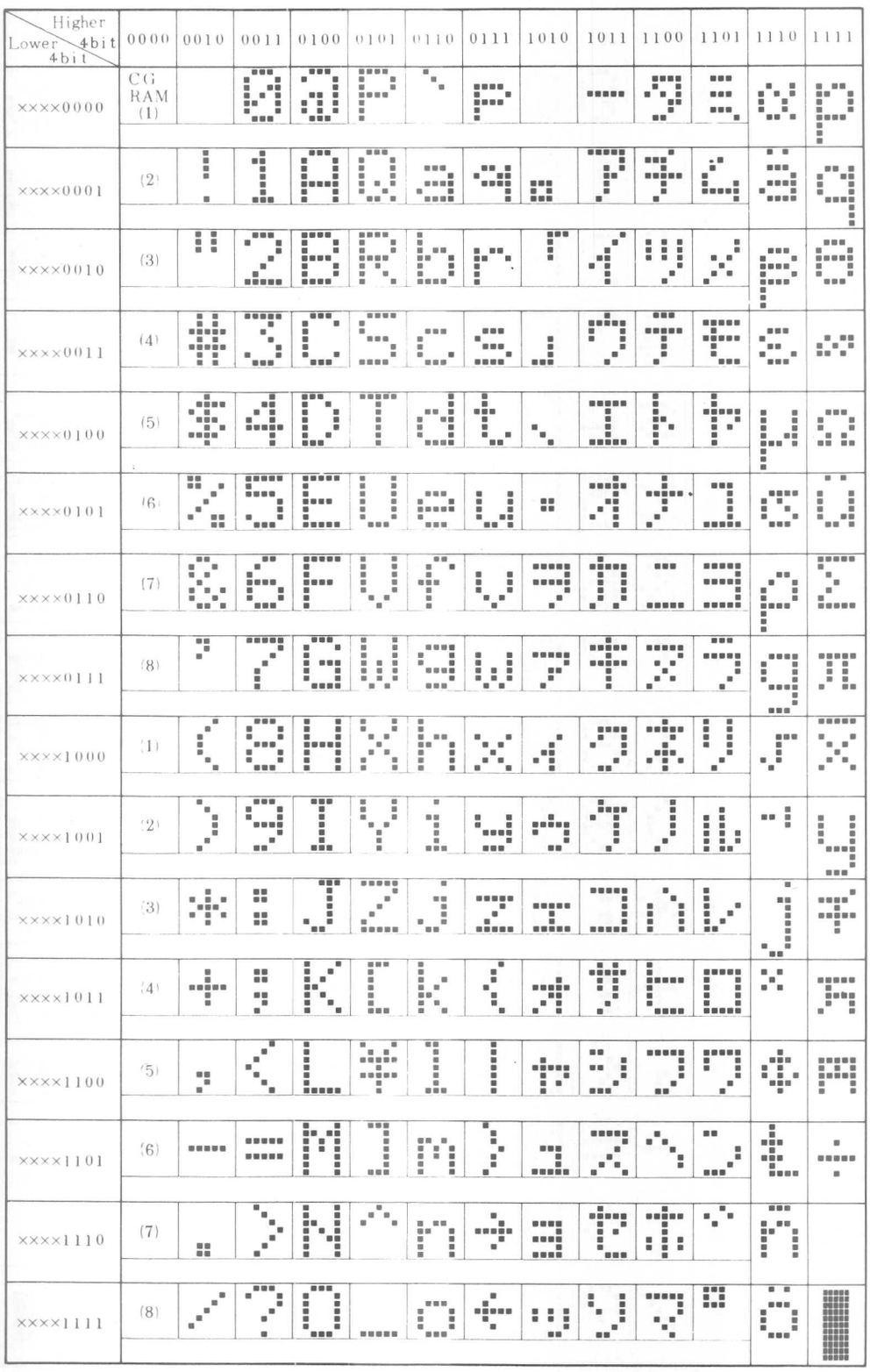

Note: CGRAM is a CHARACTER GENERATOR RAM having a storage function of character pattern which enable to change freely by users program.

2. Applied type: LM015, LM016, LM032, LM017, LM018, LM041, LM054, LM038.

Lower 4bit \ Higher 4bit	0000	0010	0011	0100	0101	0110	0111	1010	1011	1100	1101	1110	1111
××××0000	CG RAM (1)												
××××0001	(2)												
××××0010	(3)												
××××0011	(4)												
××××0100	(5)												
××××0101	(6)												
××××0110	(7)												
××××0111	(8)												
××××1000	(1)												
××××1001	(2)												
××××1010	(3)												
××××1011	(4)												
××××1100	(5)												
××××1101	(6)												
××××1110	(7)												
××××1111	(8)												

Note: CGRAM is a CHARACTER GENERATOR RAM having a storage function of character pattern which enable to change freely by users program.

CONTROL LSI ATTACHMENT TYPE LCD MODULE

This module consists of LCD driver, drive LSI, PC board, and other parts.
By attaching the control LSI HD43160A, numerals, alphabets, Kana, and symbols can be displayed.

H2532A · H2535 · H2538A · H2539 · H2555 · H2568

H2532A

- 16-Position alpha-numeric display
- Control LSI HD43160A attachment type (see page 7)

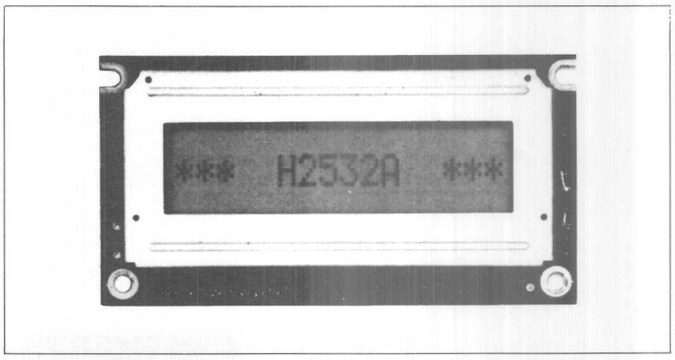

MECHANICAL DATA (nominal dimensions)

Module size	84W x 44H x 15D (max) mm
Effective display area	61W x 15.8H mm
Character size (5x7 dots)	2.9W x 5.5H mm
Pitch	3.6 mm
Dot size	0.5W x 0.7H mm
Weight	about 40 g

ABSOLUTE MAXIMUM RATINGS

Supply voltage ($V_{DD}-V_{SS}$)	7 V max.
($V_{DD}-V_{EE}$)	13.5 V max.
Input voltage (CL1, CL2, D, M, FLM)	$V_{SS} \leqq V_{IN} \leqq V_{DD}$
Operating temperature (Ta)	0 to 50°C
Storage temperature (Tstg)	−20 to 60°C

ELECTRICAL CHARACTERISTICS

Power supplies ($V_{DD}-V_{SS}$)	+5 ±0.25V
Power supplies ($V_{EE}-V_{SS}$)	−5 ±0.5 V
Current consumption +5V	1 mA max.
−5V	1 mA max.
Input high voltage	0.7 V_{DD} min.
Input low voltage	0.3 V_{DD} max.
Power supply for LCD drive (Recommended) (V_O-V_{EE})	
at Ta = 0°C	5.3 V typ.
at Ta = 25°C	4.5 V typ.
at Ta = 50°C	3.7 V typ.

OPTICAL DATA . . . . . See page 6

INTERNAL PIN CONNECTION

Pin No.	Symbol	Level	Function
1	FLM	H	The FLM signal indicates the beginning of each display cycle.
2	M	H/L	Control signal for a.c. driving.
3	CL1	H→L	The CL1 latches the serial data in the shift registers.
4	D	H/L	Serial row data of each character.
5	CL2	H→L	Clock signal for shifting the serial data.
6	V_{DD}	–	Power supply for logic circuit.
7	V_{SS}	–	Ground.
8	V_{EE}	–	Power supply for LC driving.
9	V_O	–	Operating voltage for LC driving.
10	NC	–	No connection.

Unit: mm

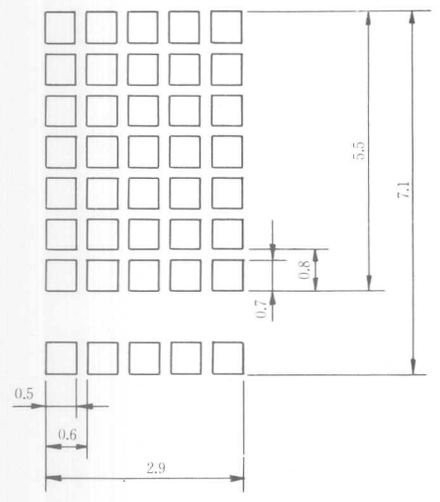

Fig. 1 Display pattern

Unit: mm

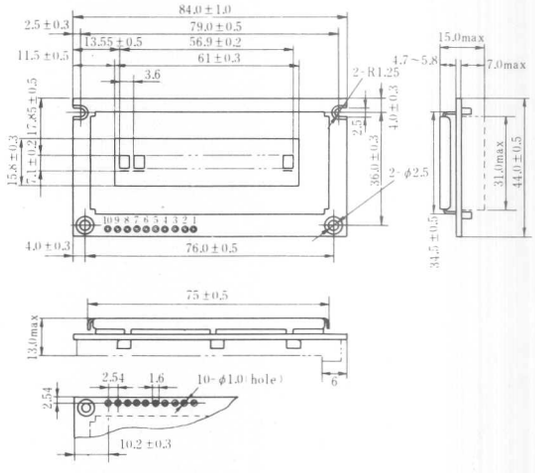

Fig. 2 External dimensions

HITACHI

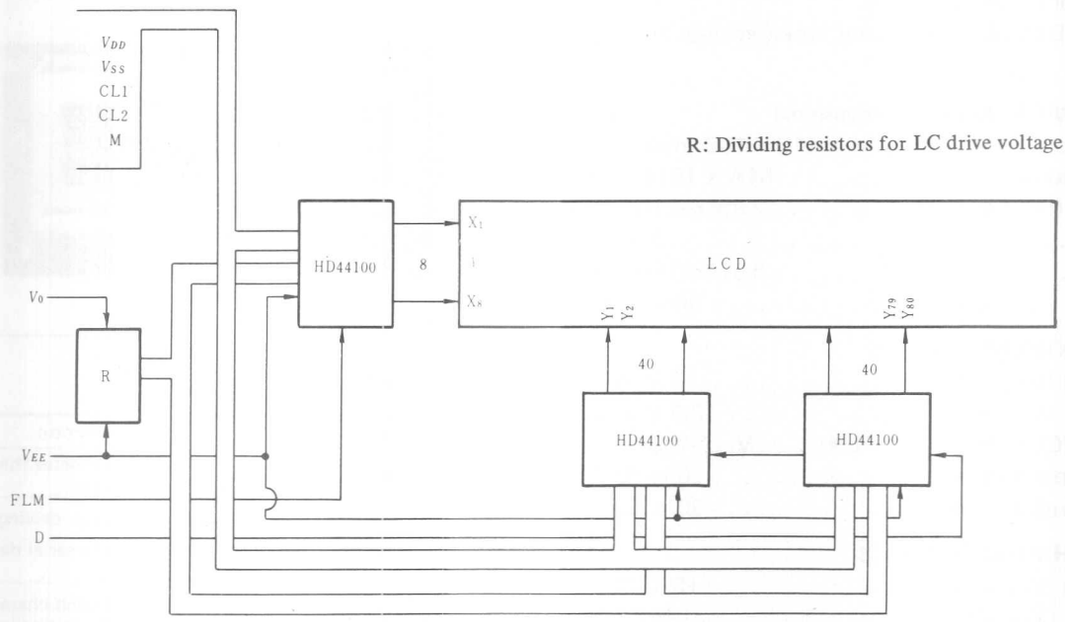

Fig. 3 Block diagram

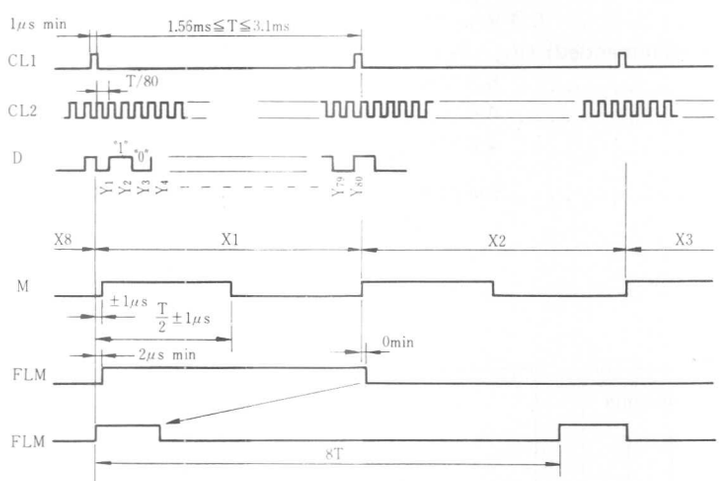

Fig. 4 Timing chart

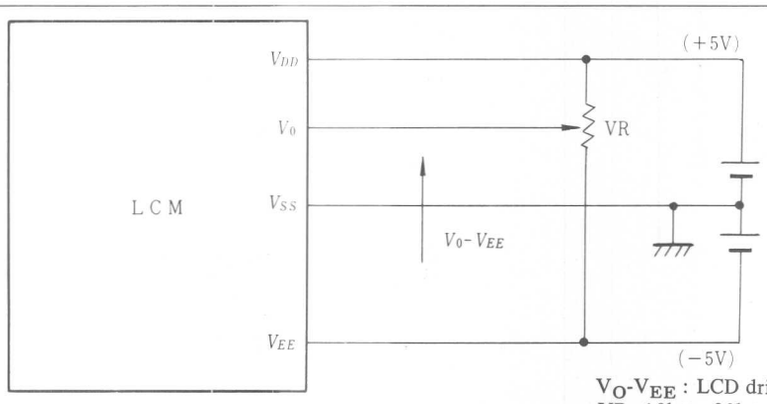

V_O-V_{EE} : LCD driving voltage
VR: 10kΩ~20kΩ

Fig. 5 Power supply

H2535

- 32-Position alpha-numeric display
- Control LSI HD43160A attachment type (see page 7)

MECHANICAL DATA (Nominal dimensions)

Module size	84W x 44H x 15D (max) mm
Effective display area	61W x 15.8H mm
Character size (5 x 7 dots)	2.9W x 4.1H mm
Pitch	3.6 mm
Dot size	0.5W x 0.5H mm
Weight	about 40 g

ABSOLUTE MAXIMUM RATINGS

Supply voltage ($V_{DD}-V_{SS}$)	7 V max.
($V_{DD}-V_{EE}$)	13.5 V max.
Input voltage (CL1, CL2, D, M, FLM)	$V_{SS} \leqq V_{IN} \leqq V_{DD}$
Operating temperature (Ta)	0 to 50°C
Storage temperature (Tstg)	−20 to 60°C

ELECTRICAL CHARACTERISTICS

Power supplies ($V_{DD}-V_{SS}$)	+5±0.25 V
($V_{EE}-V_{SS}$)	−5±0.5 V
Current consumption +5V	1mA max.
−5V	1 mA max.
Input high voltage	0.7 V_{DD} min.
Input low voltage	0.3 V_{DD} max.
Power supply for LCD drive (Recommended) (V_O-V_{EE})	
at Ta = 0°C	5.3 V typ.
at Ta = 25°C	4.9 V typ.
at Ta = 50°C	4.6 V typ.

OPTICAL DATA ..... See page 6

INTERNAL PIN CONNECTION

Pin No.	Symbol	Level	Function
1	FLM	H	The FLM signal indicates the beginning of each display cycle.
2	M	H/L	Control signal for a.c. driving:
3	CL1	H→L	The CL1 latches the serial data in the shift registers.
4	D	H/L	Serial row data of each character.
5	CL2	H→L	Clock signal for shifting the serial data.
6	V_{DD}	–	Power supply for logic circuit.
7	V_{SS}	–	Ground.
8	V_{EE}	–	Power supply for LC driving.
9	V_O	–	Operating voltage for LC driving.
10	NC	–	No connection.

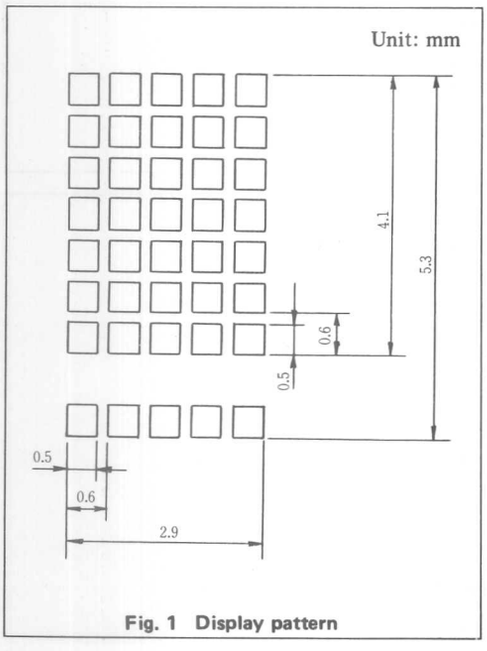

Fig. 1 Display pattern

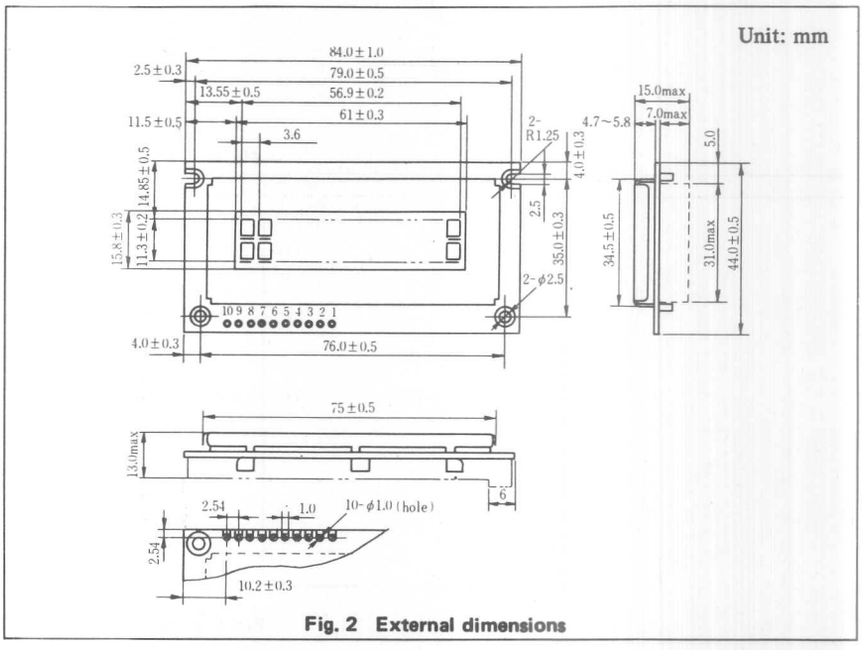

Fig. 2 External dimensions

HITACHI

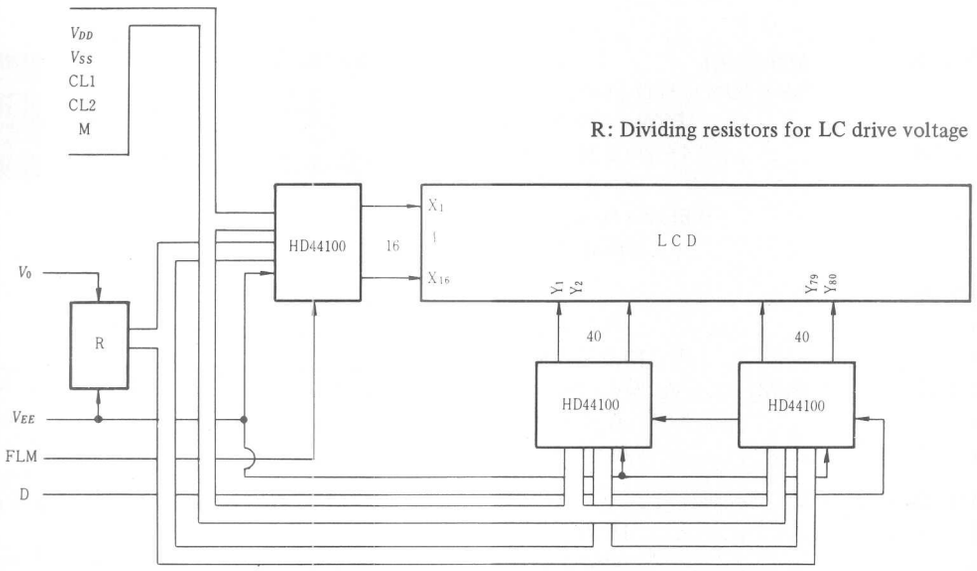

Fig. 3 Block diagram

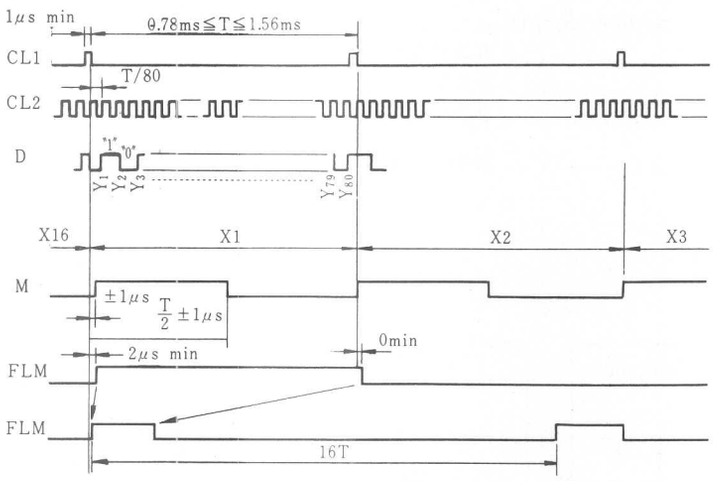

Fig. 4 Timing chart

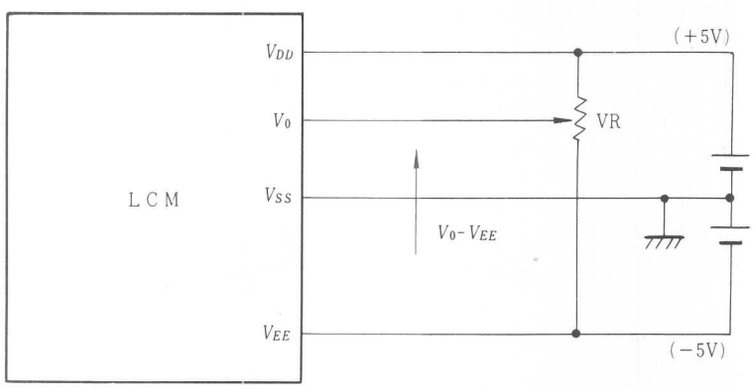

V_O-V_{EE} : LCD driving voltage
VR: 10kΩ~20kΩ

Fig. 5 Power supply

H2538A

- 40-Position alpha-numeric display
- Control LSI HD43160A attachment type (see page 7)

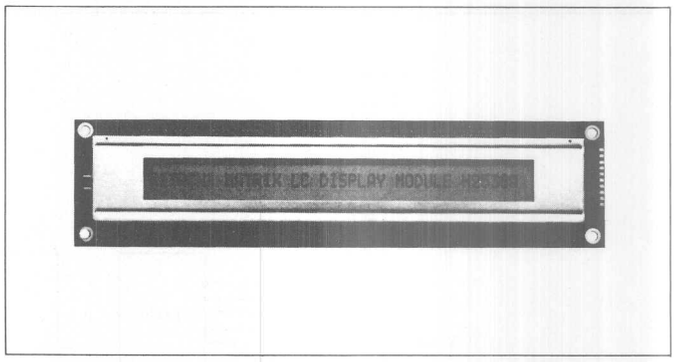

MECHANICAL DATA (Nominal dimensions)

Module size . . . . . 220W x 50H x 15D (max) mm
Effective display area . . . . . 163W x 17H mm
Character size (5 x 7 dots) . . . . . 3.15W x 5.5H mm
Pitch . . . . . 3.9 mm
Dot size . . . . . 0.55W x 0.7H mm
Weight . . . . . about 100 g

ABSOLUTE MAXIMUM RATINGS

Supply voltage ($V_{DD}-V_{SS}$) . . . . . 7 V max.
($V_{DD}-V_{EE}$) . . . . . 13.5 V max.
Input voltage (CL1, CL2, D, M, FLM) . . . $V_{SS} \leqq V_{IN} \leqq V_{DD}$
Operating temperature (Ta) . . . . . 0 to 50°C
Storage temperature (Tstg) . . . . . −20 to 60°C

ELECTRICAL CHARACTERISTICS

Power supplies ($V_{DD}-V_{SS}$) . . . . . +5±0.25 V
($V_{EE}-V_{SS}$) . . . . . −5±0.5 V
Current consumption +5V . . . . . 1 mA max.
−5V . . . . . 1 mA max.
Input high voltage . . . . . 0.7 V_{DD} min.
Input low voltage . . . . . 0.3 V_{DD} max.
Power supply for LCD drive (Recommended) (V_O-V_{EE})
at Ta = 0°C . . . . . 5.3 V typ.
at Ta = 25°C . . . . . 4.5 V typ.
at Ta = 50°C . . . . . 3.7 V typ.

OPTICAL DATA . . . . . See page 6

INTERNAL PIN CONNECTION

Pin No.	Symbol	Level	Function
1	FLM	H	The FLM signal indicates the beginning of each display cycle.
2	M	H/L	Control signal for a.c. driving.
3	CL1	H→L	The CL1 latches the serial data in the shift registers.
4	D	H/L	Serial row data of each character.
5	CL2	H→L	Clock signal for shifting the serial data.
6	V_{DD}	–	Power supply for logic circuit.
7	V_{SS}	–	Ground.
8	V_{EE}	–	Power supply for LC driving.
9	V_O	–	Operating voltage for LC driving.
10	NC	–	No connection.

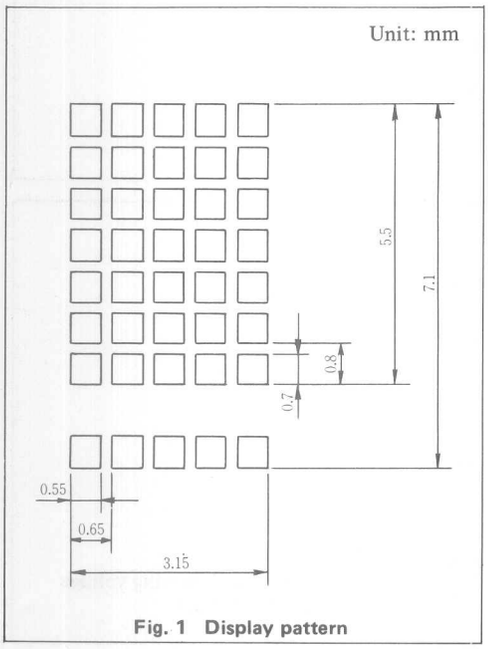

Fig. 1 Display pattern

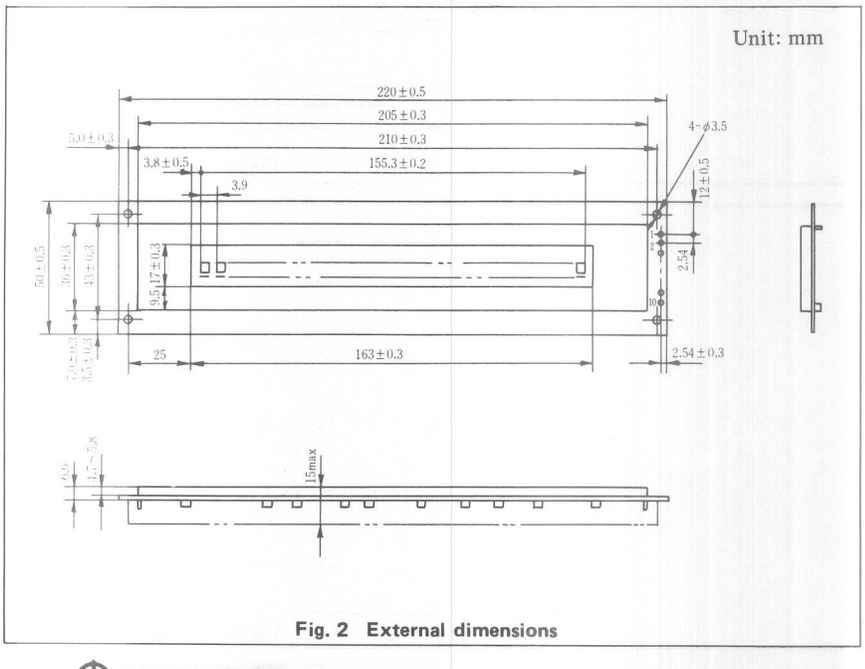

Fig. 2 External dimensions

HITACHI

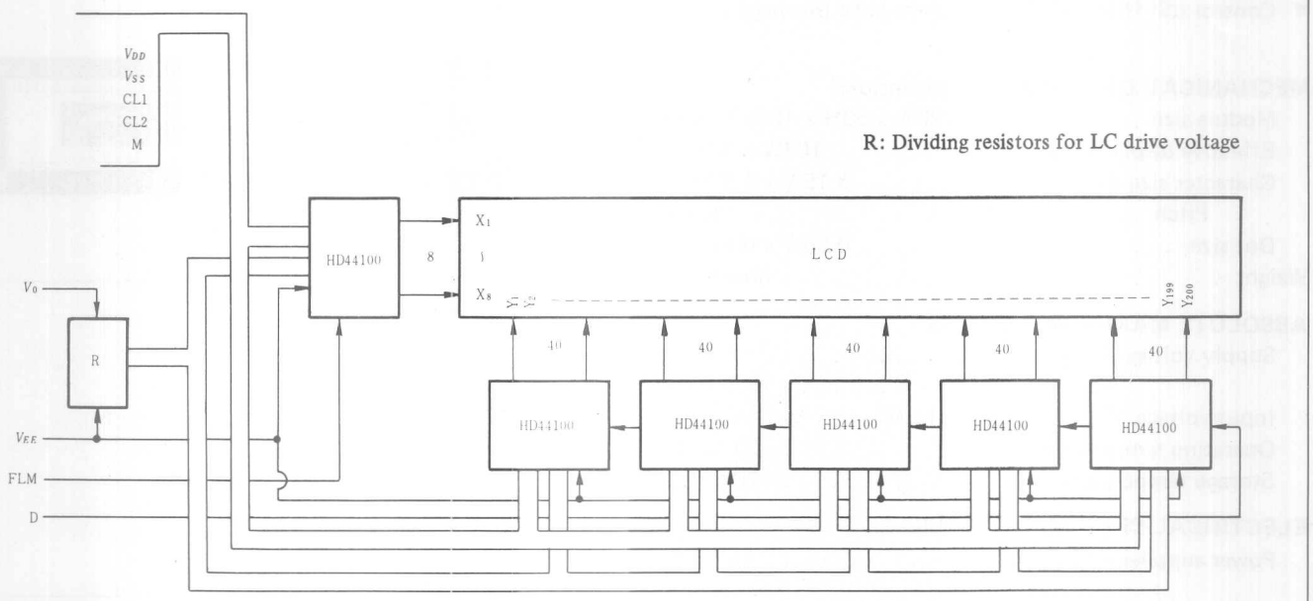

Fig. 3 Block diagram

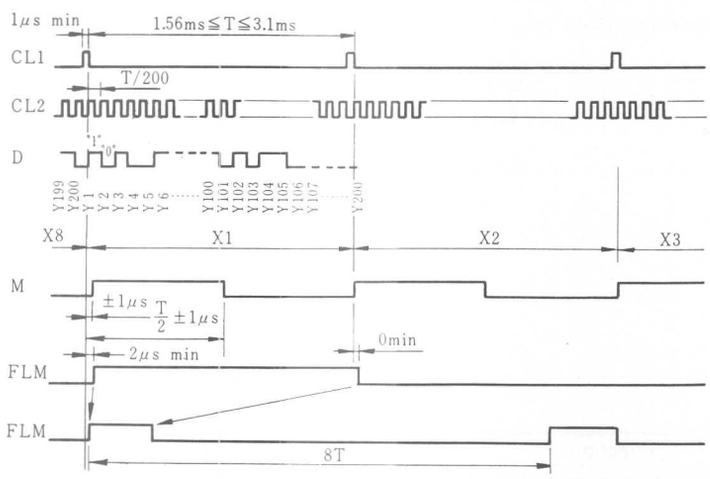

Fig. 4 Timing chart

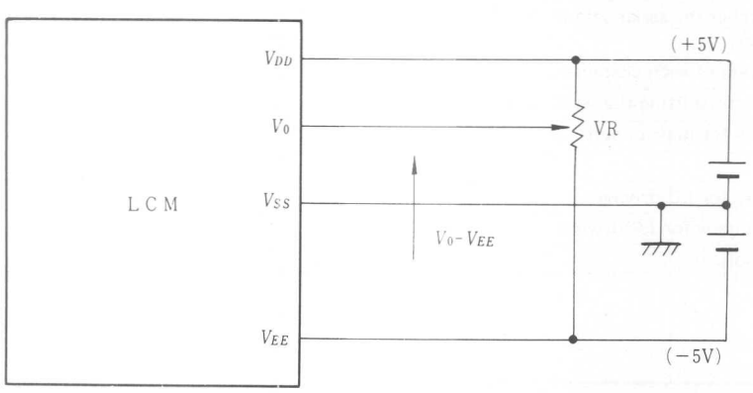

V_O-V_{EE}: LCD driving voltage
VR: 10kΩ~20kΩ

Fig. 5 Power supply

H2539

- 80-Position alpha-numeric display.
- Control LSI HD43160A attachment type (see page 7)

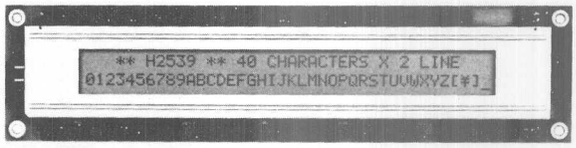

MECHANICAL DATA (Nominal dimensions)

Module size	220W x 50H x 15D (max)mm
Effective display area	163W x 17H mm
Character size (5 x 7 dots)	3.15W x 4.45H mm
Pitch	3.9 mm
Dot size	0.55W x 0.55H mm
Weight	about 100 g

ABSOLUTE MAXIMUM RATINGS

Supply voltage ($V_{DD}-V_{SS}$)	7 V max.
($V_{DD}-V_{EE}$)	13.5 V max.
Input voltage (CL1, CL2, D, M, FLM)	$V_{SS} \leqq V_{IN} \leqq V_{DD}$
Operating temperature (Ta)	0 to 50°C
Storage temperature (Tstg)	−20 to 60°C

ELECTRICAL CHARACTERISTICS

Power supplies ($V_{DD}-V_{SS}$)	+5±0.25 V
($V_{EE}-V_{SS}$)	−5±0.5 V
Current consumption +5V	1 mA max.
−5V	1 mA max.
Input high voltage	0.7 V_{DD} min.
Input low voltage	0.3 V_{DD} max.
Power supply for LCD drive (Recommended) (V_O-V_{EE})	
at Ta = 0°C	5.3 V typ.
at Ta = 25°C	4.9 V typ.
at Ta = 50°C	4.6 V typ.

OPTICAL DATA ..... See page 6

INTERNAL PIN CONNECTION

Pin No.	Symbol	Level	Function
1	FLM	H	The FLM signal indicates the beginning of each display cycle.
2	M	H/L	Control signal for a.c. driving.
3	CL1	H→L	The CL1 latches the serial data in the shift registers.
4	D	H/L	Serial row data of each character.
5	CL2	H→L	Clock signal for shifting the serial data.
6	V_{DD}	–	Power supply for logic circuit.
7	V_{SS}	–	Ground.
8	V_{EE}	–	Power supply for LC driving.
9	V_O	–	Operating voltage for LC driving.
10	NC	–	No connection.

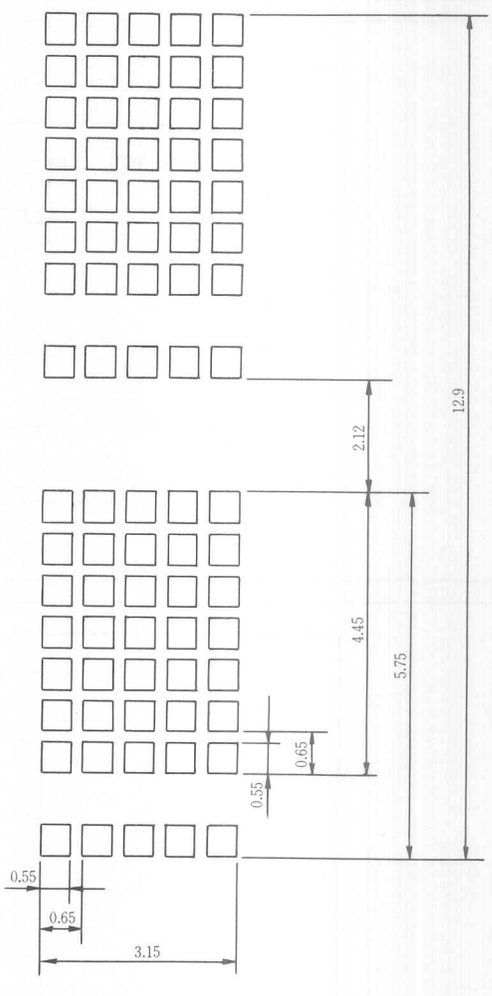

Fig. 1 Display pattern

HITACHI

Unit: mm

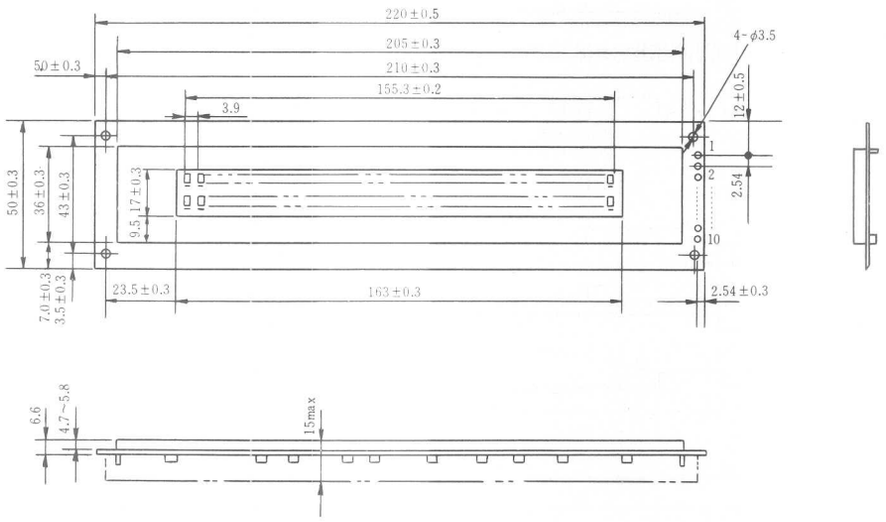

Fig. 2 External dimensions

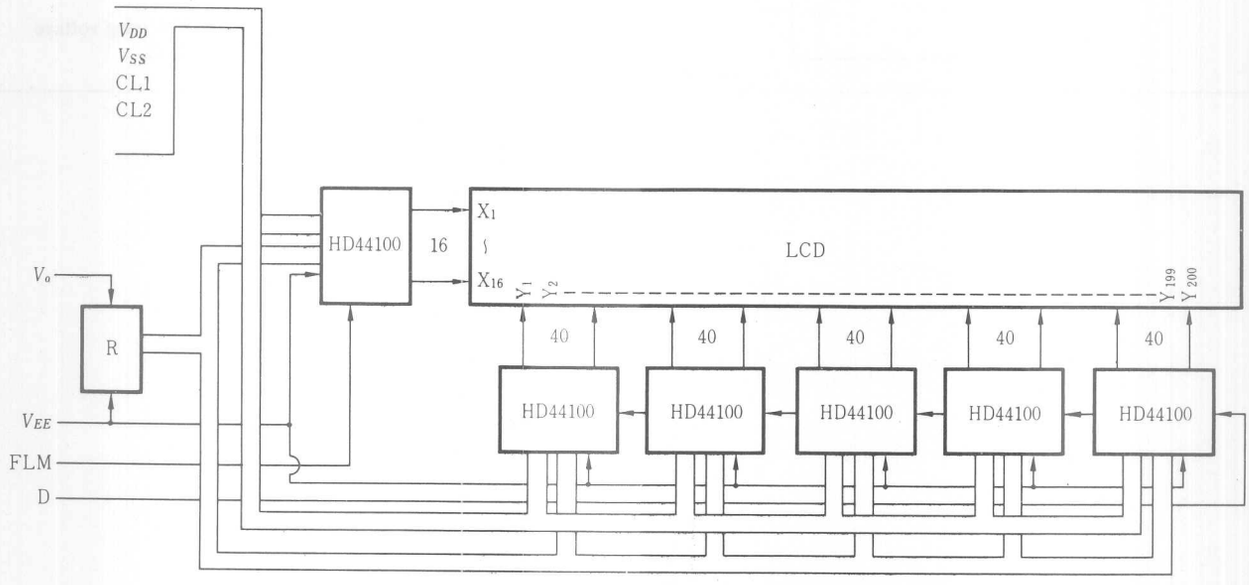

R: Dividing resistors for LC drive voltage.

Fig. 3 Block diagram

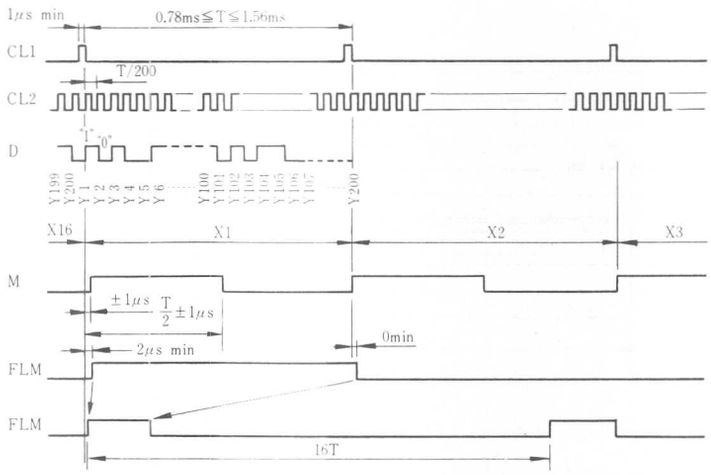

Fig. 4 Timing chart

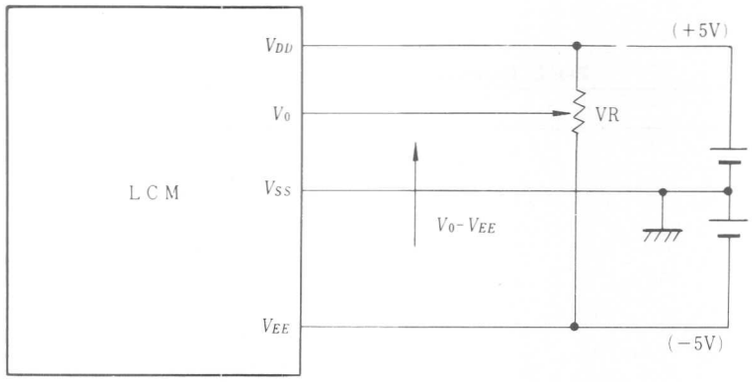

V_O-V_{EE}: LCD driving voltage
VR: 10kΩ~20kΩ

Fig. 5 Power supply

H2555

- 40-Position alpha-numeric display
- Control LSI HD43160A attachment type (see page 7)

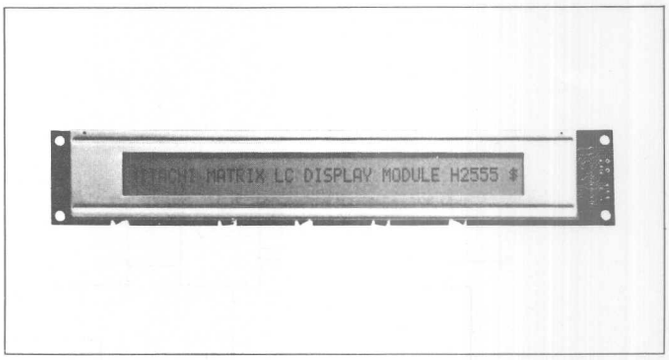

MECHANICAL DATA (Nominal dimensions)

Module size	227W x 38.5H x 15D (max) mm
Effective display are	160W x 17H mm
Character size (5 x 7 dots)	3.15W x 5.5H mm
Pitch	3.9 mm
Dot size	0.55W x 0.7H mm
Weight	about 100g

ABSOLUTE MAXIMUM RATINGS

Supply voltage ($V_{DD}-V_{SS}$)	7 V max.
($V_{DD}-V_{EE}$)	13.5 V max.
Input voltage (CL1, CL2, D, M, FLM)	$V_{SS} \leqq V_{IN} \leqq V_{DD}$
Operating temperature (Ta)	0 to 50°C
Storage temperature (Tstg)	−20 to 60°C

ELECTRICAL CHARACTERISTICS

Power supplies ($V_{DD}-V_{SS}$)	+5±0.25 V
($V_{EE}-V_{SS}$)	−5±0.5 V
Current consumption +5V	1 mA max.
−5V	1 mA max.
Input high voltage	0.7 V_{DD} min.
Input low voltage	0.3 V_{DD} max.
Power supply for LCD drive (Recommended) (V_O-V_{EE})	
at Ta = 0°C	5.3 V
at Ta = 25°C	4.5 V
at Ta = 50°C	3.7 V

OPTICAL DATA See page 6

INTERNAL PIN CONNECTION

Pin No.	Symbol	Level	Function
1	FLM	H	The FLM signal indicates the beginning of each display cycle.
2	M	H/L	Control signal for a.c. driving.
3	CL1	H→L	The CL1 latches the serial data in the shift registers.
4	D	H/L	Serial row data of each character.
5	CL2	H→L	Clock signal for shifting the serial data.
6	V_{DD}	—	Power supply for logic circuit.
7	V_{SS}	—	Ground.
8	V_{EE}	—	Power supply for LC driving.
9	V_O	—	Operating voltage for LC driving.
10	NC	—	No connection.

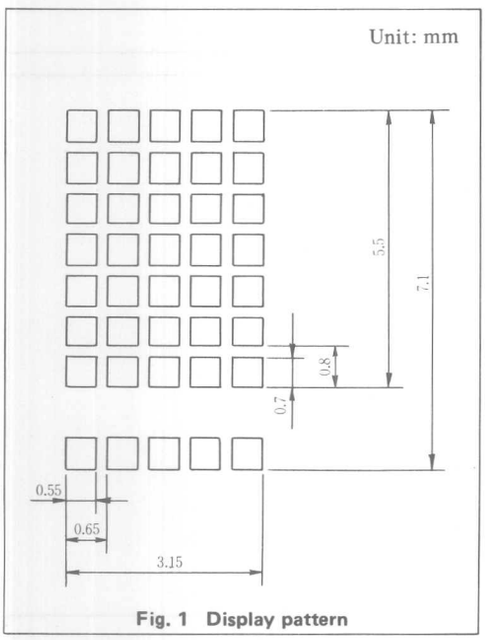

Fig. 1 Display pattern

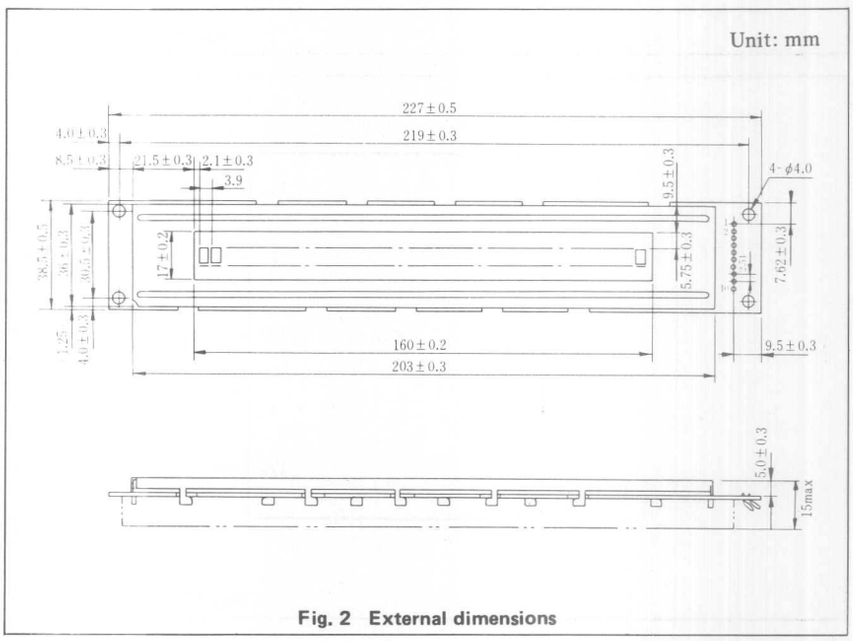

Fig. 2 External dimensions

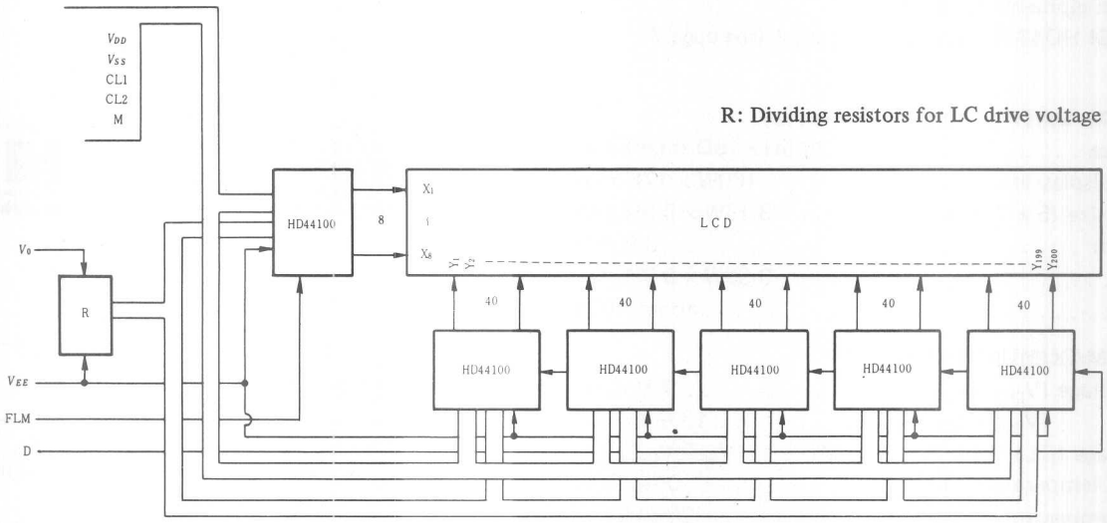

Fig. 3 Block diagram

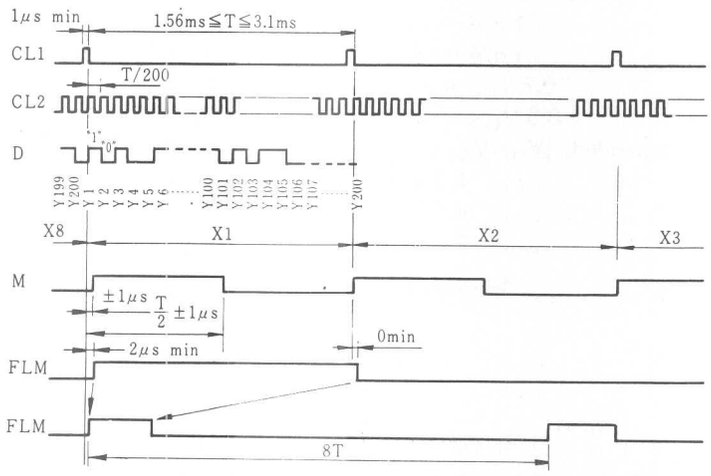

Fig. 4 Timing chart

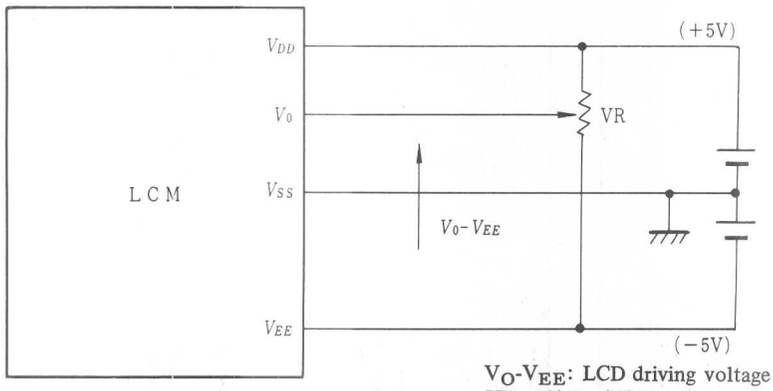

V_O-V_{EE}: LCD driving voltage
VR: 10kΩ~20kΩ

Fig. 5 Power supply

H2568

- 40-Position alpha-numeric display
- Control LSI HD43160A attachment type (see page 7)

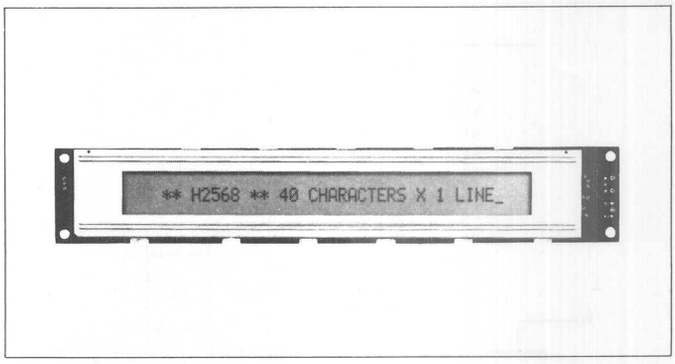

MECHANICAL DATA (Nominal dimensions)

Module size . . . . . 227W x 38.5 x 15D (max) mm
Effective display area . . . . . 163W x 17H mm
Character size (5 x 10 dots) . . . . . 3.15W x 8.7H mm
Pitch . . . . . 3.9 mm
Dot size . . . . . 0.55W x 0.7H mm
Weight . . . . . about 100 g

ABSOLUTE MAXIMUM RATINGS

Supply voltage ($V_{DD}-V_{SS}$) . . . . . 7 V max.
($V_{DD}-V_{EE}$) . . . . . 13.5 V max.
Input voltage (CL1, CL2, D, M, FLM) . . . $V_{SS} \leqq V_{IN} \leqq V_{DD}$
Operating temperature (Ta) . . . . . 0 to 50°C
Storage temperature (Tstg) . . . . . −20 to 60°C

ELECTRICAL CHARACTERISTICS

Power supplies ($V_{DD}-V_{SS}$) . . . . . +5±0.25 V
($V_{EE}-V_{SS}$) . . . . . −5±0.5 V
Current consumption +5V . . . . . 1 mA max.
−5V . . . . . 1 mA max.
Input high voltage . . . . . 0.7 V_{DD} min.
Input low voltage . . . . . 0.3 V_{DD} max.
Power supply for LCD drive (Recommended) (V_O-V_{EE})
at Ta = 0°C . . . . . 5.8 V typ.
at Ta = 25°C . . . . . 4.9 V typ.
at Ta = 50°C . . . . . 4.0 V typ.

OPTICAL DATA . . . . . See page 6

INTERNAL PIN CONNECTION

Pin No.	Symbol	Level	Function
1	FLM	H	The FLM signal indicates the beginning of each display cycle.
2	M	H/L	Control signal for a.c. driving.
3	CL1	H→L	The CL1 latches the serial data in the shift registers.
4	D	H/L	Serial row data of each character.
5	CL2	H→L	Clock signal for shifting the serial data.
6	V_{DD}	–	Power supply for logic circuit.
7	V_{SS}	–	Ground.
8	V_{EE}	–	Power supply for LC driving.
9	V_O	–	Operating voltage for LC driving.
10	NC	–	No connection.

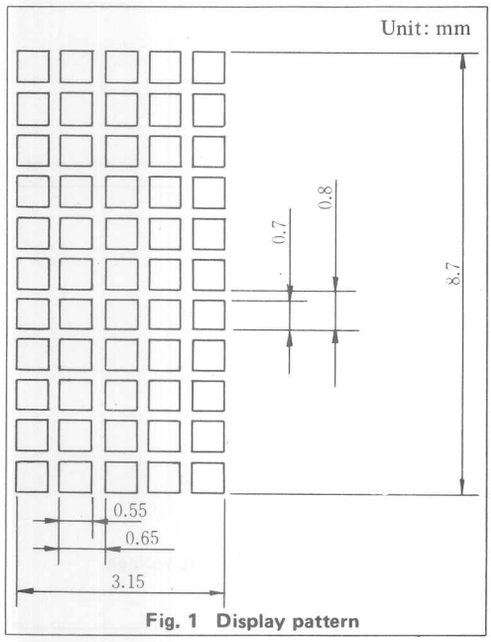

Fig. 1 Display pattern

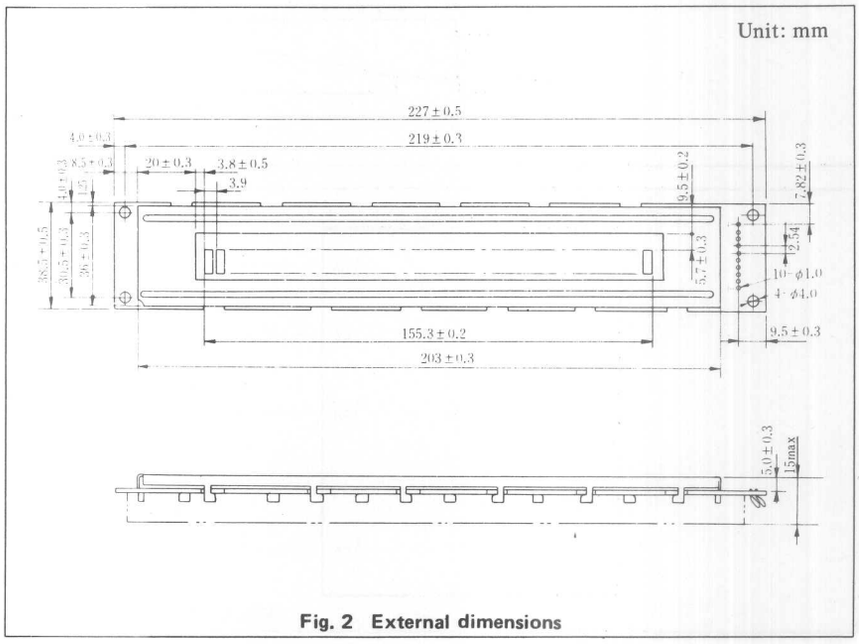

Fig. 2 External dimensions

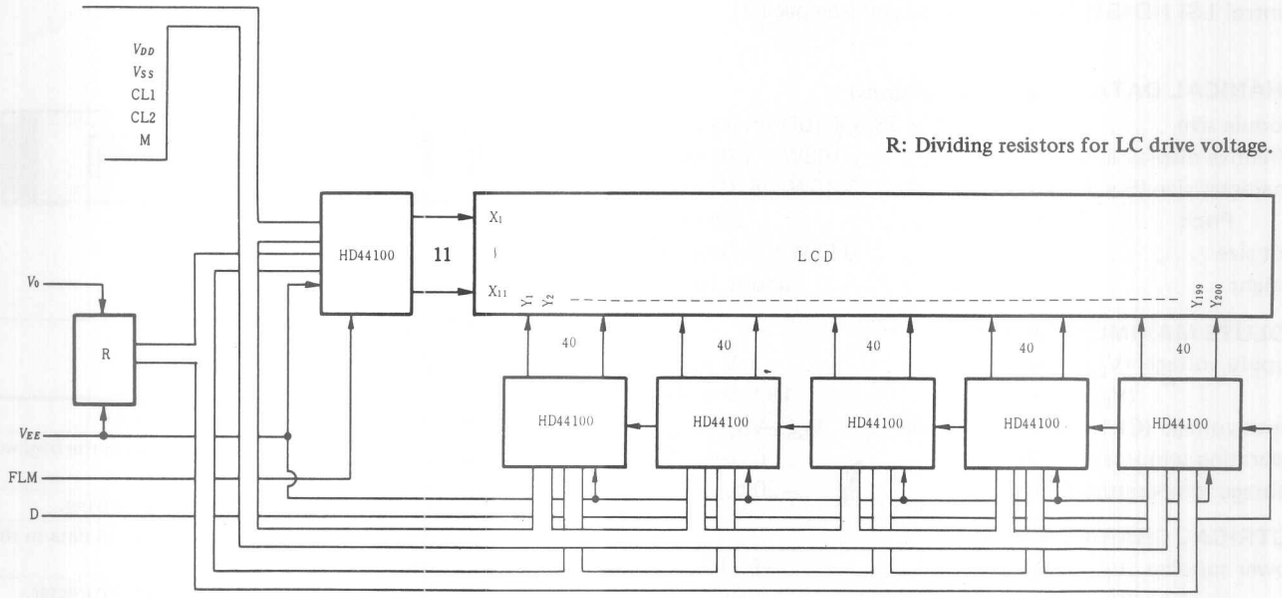

Fig. 3 Block diagram

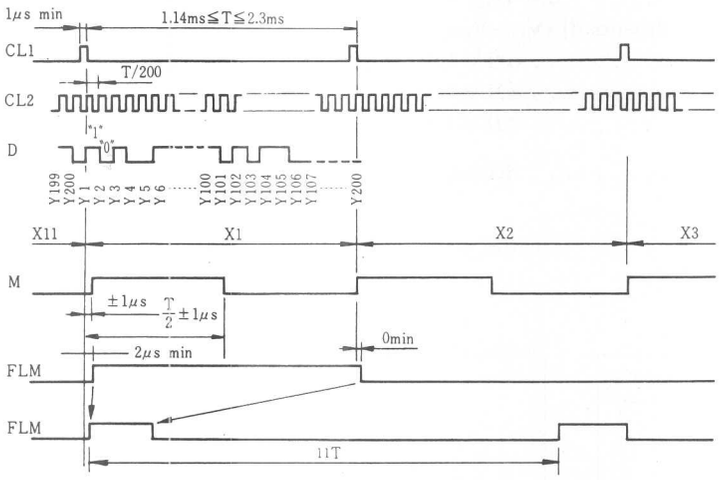

Fig. 4 Timing chart

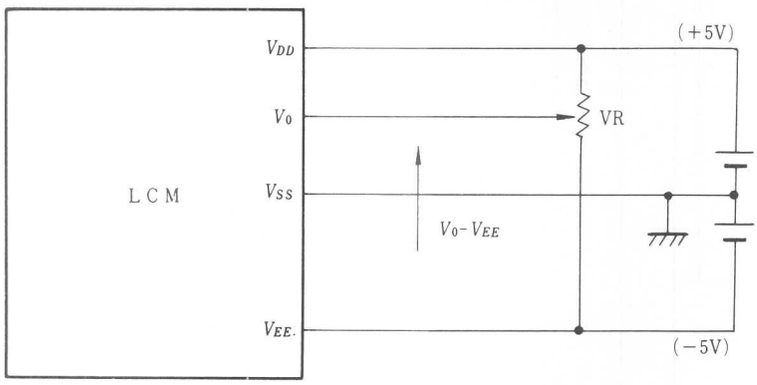

V_O-V_{EE}: LCD driving voltage
VR: 10kΩ~20kΩ

Fig. 5 Power supply

BUILT-IN CONTROL LSI TYPE LCD MODULE

This is a dot matrix LCD module containing the control LSI for character display. Functions such as control, refresh, and display are operated by the built-in control LSI.
This LCD module can display 160 type JIS characters and symbols and 32 type special characters and symbols. This LCD module can be interfaced to the 4-bit or 8-bit MPU, so the character display and the display shift can be easily operated by using control commands. This LCD module also contains the character generator RAM, hence user's patterns can be displayed.

H2570 · LM015 · LM027 · H2571 · H2572 · LM016
LM032 · LM017 · LM018 · LM041

H2570

- 16-Position alpha-numeric display.
- Built-in control LSI HD44780 type (see page 7)

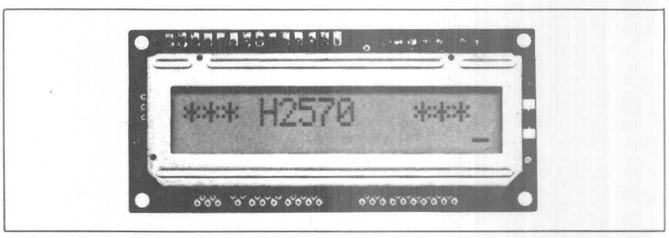

MECHANICAL DATA (Nominal dimensions)

Module size	80W x 36H x 12D (max) mm
Effective display area	64.5W x 13.8H mm
Character size (5 x 10 dots)	3.15W x 7.9H mm
Pitch	3.7 mm
Dot size	0.55W x 0.7H mm
Weight	about 25g

ABSOLUTE MAXIMUM RATINGS

	min.	max.
Power supply for logic ($V_{DD}-V_{SS}$)	0	7.0 V
Power supply for LCD drive ($V_{DD}-V_O$)	0	13.5 V
Input voltag (Vi)	V_{SS}	V_{DD} V
Operating temperature (Ta)	0	50°C
Storage temperature (Tstg)	−20	70°C

ELECTRICAL CHARACTRISTICS

Ta = 25°C, V_{DD} = 5.0 V ± 0.25 V

Input "high" voltage (Vi_H)	2.2 V min.	
Input "low" voltage (Vi_L)	0.6 V max.	
Output high voltage (V_{OH}) ($-I_{OH}$ = 0.2 mA)	2.4 V min.	
Output low voltage (V_{OL}) (I_{OL} = 1.2 mA)	0.4 V max.	
Power supply current (I_{DD}) (V_{DD} = 5.0 V)	0.5 mA typ.	2.0 mA max.

Power supply for LCD drive (Recommended) ($V_{DD}-V_O$)

	Du=1/8	Du=1/11
at Ta = 0°C	4.0	4.2 V typ.
at Ta = 25°C	3.7	3.8 V typ.
at Ta = 50°C	3.3	3.3 V typ.

OPTICAL DATA ..... See page 6

INTERNAL PIN CONNECTION

Pin No.	Symbol	Level	Function	
1	V_{SS}	–	0V	Power supply
2	V_{DD}	–	5V	
3	V_O	–	–	
4	RS	H/L	L: Instruction code input H: Data input	
5	R/W	H/L	H: Data read (LCD module→MPU) L: Data write (LCD module←MPU)	
6	E	H, H→L	Enable signal	
7	DB0	H/L	Data bus line Note (1), Note (2)	
8	DB1	H/L		
9	DB2	H/L		
10	DB3	H/L		
11	DB4	H/L		
12	DB5	H/L		
13	DB6	H/L		
14	DB7	H/L		

Note:

In the HD44780, the data can be sent in either 4-bit 2-operation or 8-bit 1-operation so that it can interface to both 4 and 8 bit MPU's.

(1) When interface data is 4 bits long, data is transferred using only 4 buses of DB_4~DB_7 and DB_0~DB_3 are not used. Data transfer between the HD44780 and the MPU completes when 4-bit data is transferred twice. Data of the higher order 4 bits (contents of DB_4~DB_7 when interface data is 8 bits long) is transferred first and then lower order 4 bits (contents of DB_0~DB_3 when interface data is 8 bits long).

(2) When interface data is 8 bits long, data is transferred using 8 data buses of DB_0~DB_7.

Unit: mm

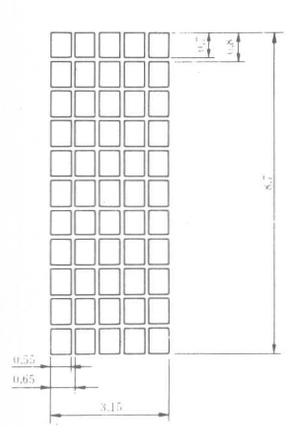

Fig. 1 Display pattern

Unit: mm

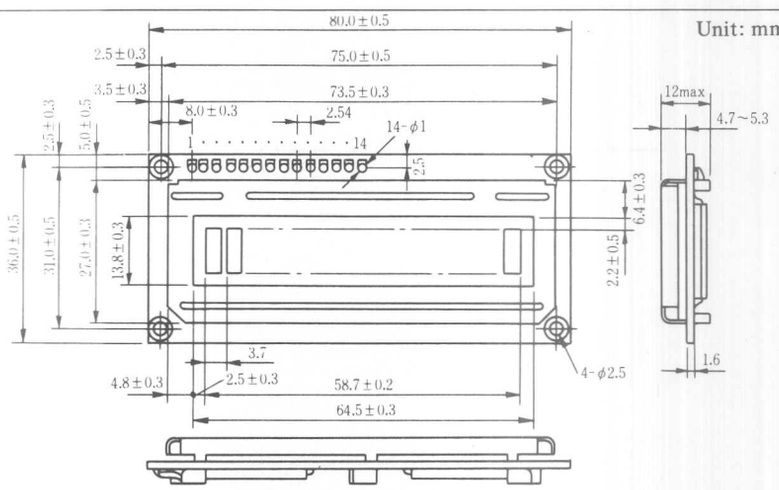

Fig. 2 External dimensions

HITACHI

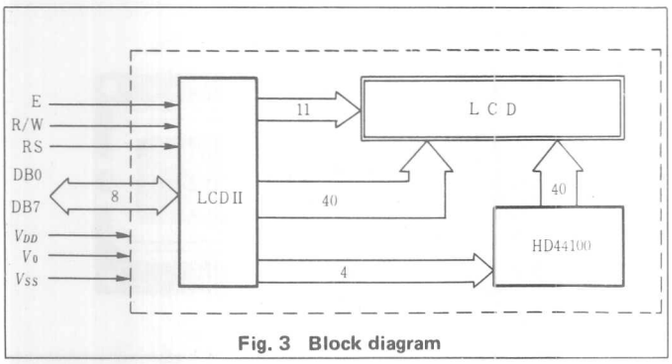

Fig. 3 Block diagram

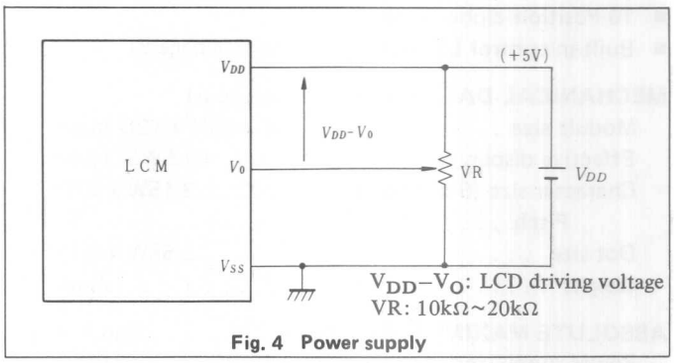

Fig. 4 Power supply

TIMING CHARACTERISTICS

Item	Symbol	Test condition	min.	typ.	max.	Unit
Enable cycle time	t_{cyc}	Fig. 5, Fig. 6	1.0	–	–	μs
Enable pulse width	P_{WEH}	Fig. 5, Fig. 6	450	–	–	ns
Enable rise/fall time	t_{Er}, t_{Ef}	Fig. 5, Fig. 6	–	–	25	ns
RS, R/W set up time	t_{AS}	Fig. 5, Fig. 6	140	–	–	ns
Data delay time	t_{DDR}	Fig. 6	–	–	320	ns
Data set up time	t_{DSW}	Fig. 5	225	–	–	ns
Hold time	t_H	Fig. 5, Fig. 6	10	–	–	ns

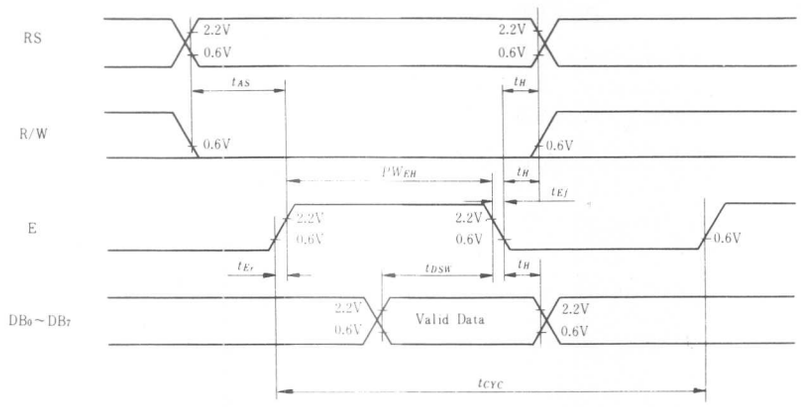

Fig. 5 Interface timing (data write)

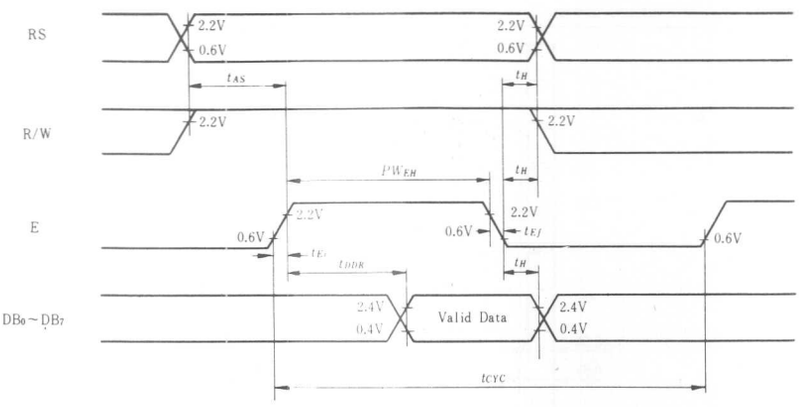

Fig. 6 Interface timing (data read)

LM015

- 16-Position alpha-numeric display
- Built-in control LSI HD44780 type (see page 7)

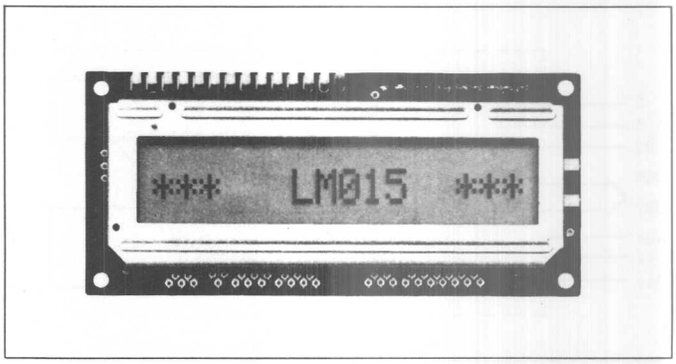

MECHANICAL DATA (Nominal dimensions)

Module size	80W x 36H x 12D (max) mm
Effective display area	64.5W x 13.8H mm
Character size (5 x 7 dots)	3.15W x 5.5H mm
Pitch	3.7 mm
Dot size	0.55W x 0.7H mm
Weight	about 25 g

ABSOLUTE MAXIMUM RATINGS

	min.	max.
Power supply for logic ($V_{DD}-V_{SS}$)	0	7.0 V
Power supply for LCD drive ($V_{DD}-V_O$)	0	13.5 V
Input voltage (Vi)	V_{SS}	V_{DD} V
Operating temperature (Ta)	0	50°C
Storage temperature (Tstg)	−20	70°C

ELECTRICAL CHARACTERISTICS

Ta = 25°C, V_{DD} = 5.0V ± 0.25 V

Input "high" voltage (Vi_H)	2.2 V min.
Input "low" voltage (Vi_L)	0.6 V max.
Output high voltage (V_{OH}) ($-I_{OH}$ = 0.2 mA)	2.4 V min.
Output low voltage (V_{OL}) (I_{OL} = 1.2 mA)	0.4 V max.
Power supply current (I_{DD}) (V_{DD} = 5.0 V)	0.5 mA typ. 2.0 mA max.
Power supply for LCD drive (Recommended) ($V_{DD}-V_O$) Du = 1/8	
at Ta = 0°C	4.0 V typ.
at Ta = 25°C	3.7 V typ.
at Ta = 50°C	3.3 V typ.

OPTICAL DATA ..... See page 6

INTERNAL PIN CONNECTION

Pin No.	Symbol	Level	Function	
1	V_{SS}	–	0V	Power supply
2	V_{DD}	–	5V	
3	V_O	–	–	
4	RS	H/L	L: Instruction code input H: Data input	
5	R/W	H/L	H: Data read (LCD module→MPU) L: Data write (LCD module←MPU)	
6	E	H, H→L	Enable signal	
7	DB0	H/L	Data bus line Note (1), Note (2)	
8	DB1	H/L		
9	DB2	H/L		
10	DB3	H/L		
11	DB4	H/L		
12	DB5	H/L		
13	DB6	H/L		
14	DB7	H/L		

Note:

In the HD44780, the data can be sent in either 4-bit 2-operation or 8-bit 1-operation so that it can interface to both 4 and 8 bit MPU's.

(1) When interface data is 4 bits long, data is transferred using only 4 buses of DB_4~DB_7 and DB_0~DB_3 are not used. Data transfer between the HD44780 and the MPU completes when 4-bit data is transferred twice. Data of the higher order 4 bits (contents of DB_4~DB_7 when interface data is 8 bits long) is transferred first and then lower order 4 bits (contents of DB_0~DB_3 when interface data is 8 bits long).

(2) When interface data is 8 bits long, data is transferred using 8 data buses of DB_0~DB_7.

Unit: mm

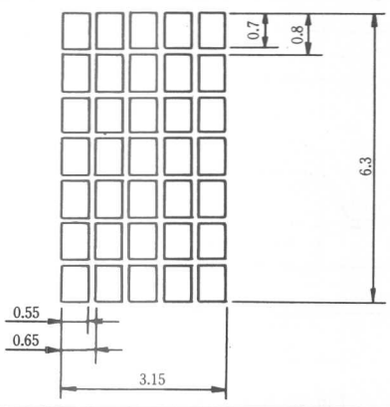

Fig. 1 Display pattern

HITACHI

Unit: mm

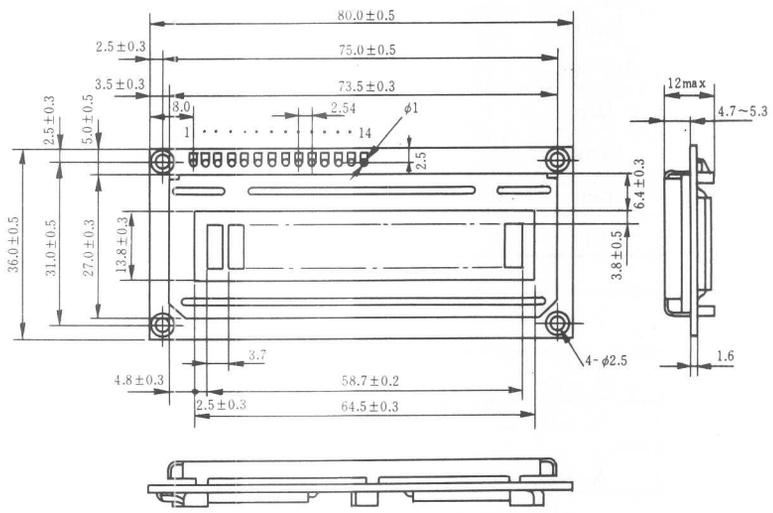

Fig. 2 External dimensions

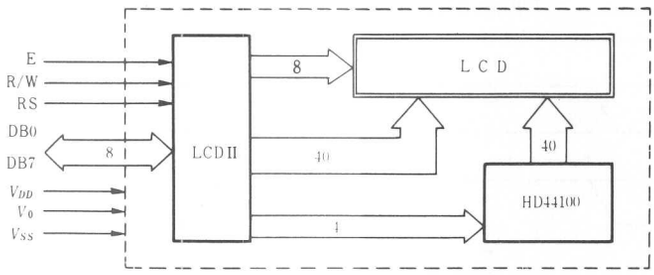

Fig. 3 Block diagram

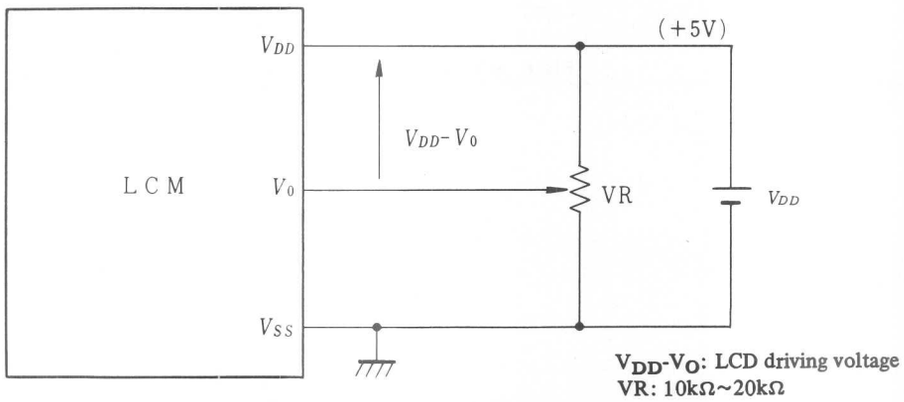

Fig. 4 Power supply

TIMING CHARACTERISTICS

Item	Symbol	Test condition	min.	typ.	max.	Unit
Enable cycle time	t_{cyc}	Fig. 5, Fig. 6	1.0	–	–	μs
Enable pulse width	P_{WEH}	Fig. 5, Fig. 6	450	–	–	ns
Enable rise/fall time	t_{Er}, t_{Ef}	Fig. 5, Fig. 6	–	–	25	ns
RS, R/W set up time	t_{AS}	Fig. 5, Fig. 6	140	–	–	ns
Data delay time	t_{DDR}	Fig. 6	–	–	320	ns
Data set up time	t_{DSW}	Fig. 5	225	–	–	ns
Hold time	t_H	Fig. 5, Fig. 6	10	–	–	ns

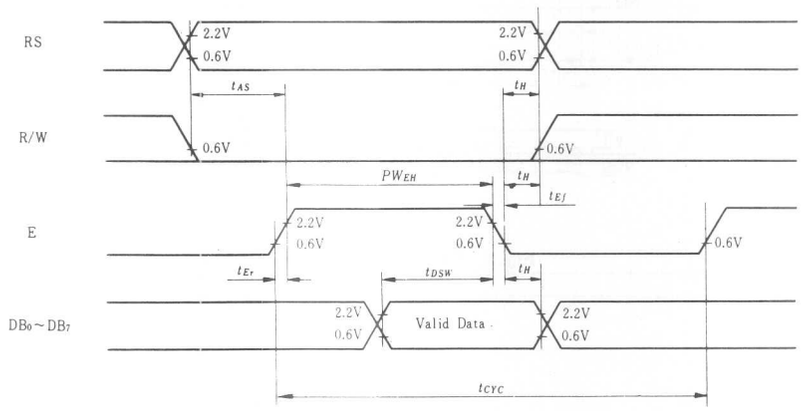

Fig. 5 Interface timing (data write)

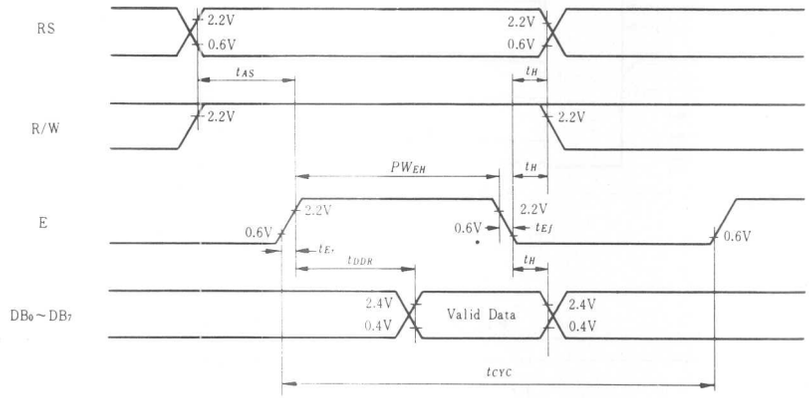

Fig. 6 Interface timing (data read)

LM027

- 24-Position alpha-numeric display
- Built-in control LSI HD44780 type (see page 7)

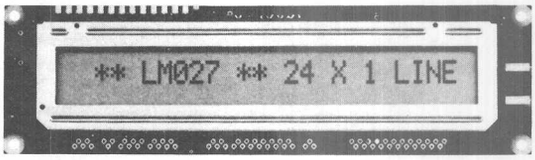

MECHANICAL DATA (Nominal dimensions)

Module size	126W x 36H x 12D (max) mm
Effective display area	100W x 13.8H mm
Character size (5 x 10 dots)	3.15W x 7.9H mm
Pitch	3.75 mm
Dot size	0.55W x 0.7H mm
Weight	about 40 g

ABSOLUTE MAXIMUM RATINGS

	min.	max.
Power supply for logic ($V_{DD}-V_{SS}$)	0	7.0 V
Power supply for LCD drive ($V_{DD}-V_O$)	0	13.5 V
Input voltage (Vi)	V_{SS}	V_{DD} V
Operating temperature (Ta)	0	50°C
Storage temperature (Tstg)	−20	70°C

ELECTRICAL CHARACTERISTICS

Ta = 25°C, V_{DD} = 5.0 V ± 0.25 V

Input "high" voltage (Vi_H)	2.2 V min.	
Input "low" voltage (Vi_L)	0.6 V max.	
Output high voltage (V_{OH}) ($-I_{OH}$=0.2 mA)	2.4 V min.	
Output low voltage (V_{OL}) (I_{OL} = 1.2 mA)	0.4 V max.	
Power supply current (I_{DD}) (V_{DD} = 5.0 V)	0.5 mA typ.	
	2.0 mA max.	

Power supply for LCD drive (Recommended) ($V_{DD}-V_O$)

	Du=1/8	Du=1/11
at Ta = 0°C	4.0	4.2 V typ.
at Ta = 25°C	3.7	3.8 V typ.
at Ta = 50°C	3.3	3.3 V typ.

OPTICAL DATA . . . . . See page 6

INTERNAL PIN CONNECTION

Pin No.	Symbol	Level	Function	
1	V_{SS}	—	0V	Power supply
2	V_{DD}	—	5V	
3	V_O	—	—	
4	RS	H/L	L: Instruction code input H: Data input	
5	R/W	H/L	H: Data read (LCD module→MPU) L: Data write (LCD module←MPU)	
6	E	H, H→L	Enable signal	
7	DB0	H/L	Data bus line Note (1), Note (2)	
8	DB1	H/L		
9	DB2	H/L		
10	DB3	H/L		
11	DB4	H/L		
12	DB5	H/L		
13	DB6	H/L		
14	DB7	H/L		

Note:

In the HD44780, the data can be sent in either 4-bit 2-operation or 8-bit 1-operation so that it can interface to both 4 and 8 bit MPU's.

(1) When interface data is 4 bits long, data is transferred using only 4 buses of DB_4~DB_7 and DB_0~DB_3 are not used. Data transfer between the HD44780 and the MPU completes when 4-bit data is transferred twice. Data of the higher order 4 bits (contents of DB_4~DB_7 when interface data is 8 bits long) is transferred first and then lower order 4 bits (contents of DB_0~DB_3 when interface data is 8 bits long).

(2) When interface data is 8 bits long, data is transferred using 8 data buses of DB_0~DB_7.

Unit: mm

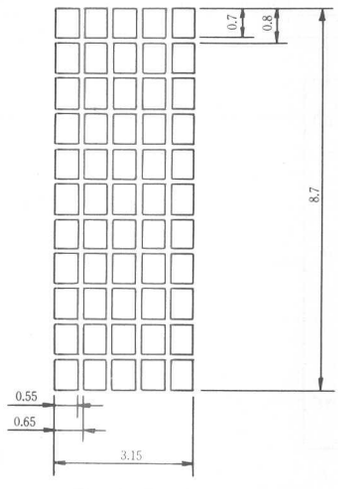

Fig. 1 Display pattern

Unit: mm

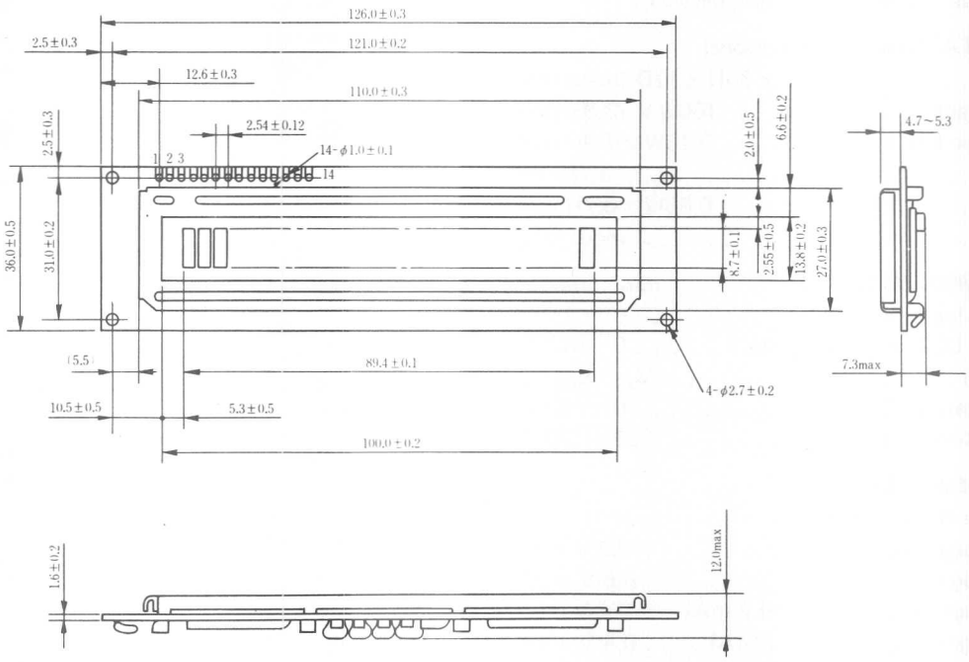

Fig. 2 External dimensions

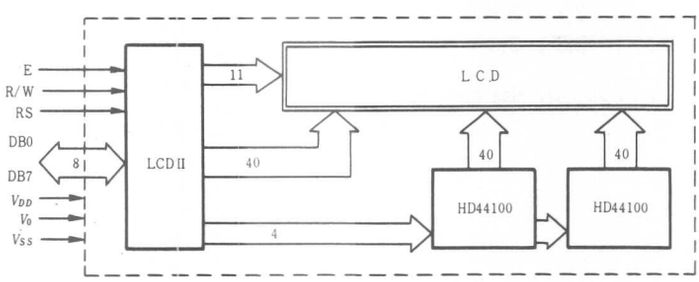

Fig. 3 Block diagram

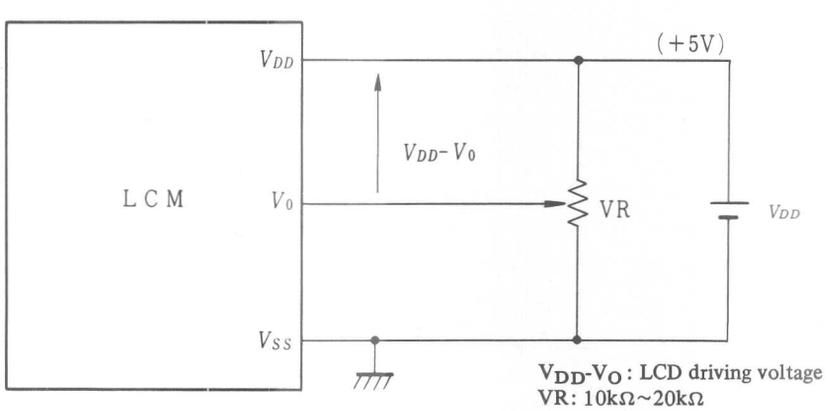

V_{DD}-V_O : LCD driving voltage
VR: 10kΩ~20kΩ

Fig. 4 Power supply

TIMING CHARACTERISTICS

Item	Symbol	Test condition	min.	typ.	max.	Unit
Enable cycle time	t_{cyc}	Fig. 5, Fig. 6	1.0	–	–	μs
Enable pulse width	P_{wEH}	Fig. 5, Fig. 6	450	–	–	ns
Enable rise/fall time	t_{Er}, t_{Ef}	Fig. 5, Fig. 6	–	–	25	ns
RS, R/W set up time	t_{AS}	Fig. 5, Fig. 6	140	–	–	ns
Data delay time	t_{DDR}	Fig. 6	–	–	320	ns
Data set up time	t_{DSW}	Fig. 5	225	–	–	ns
Hold time	t_H	Fig. 5, Fig. 6	10	–	–	ns

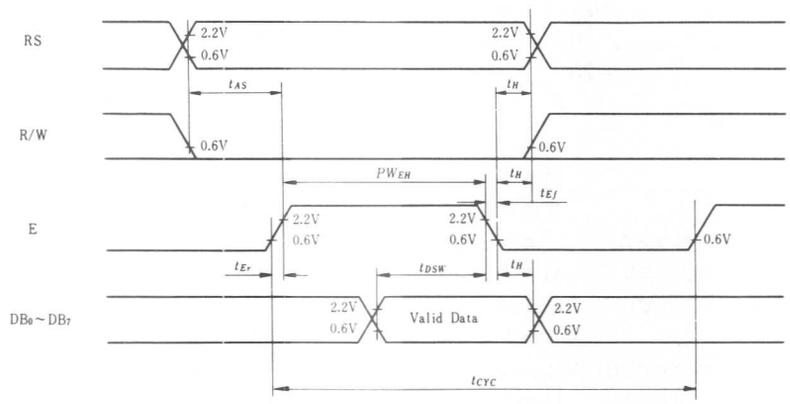

Fig. 5 Interface timing (data write)

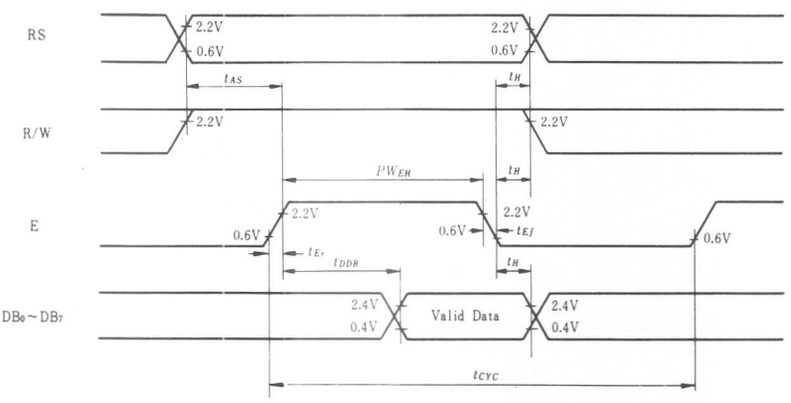

Fig. 6 Interface timing (data read)

H2571

- 32-Position alpha-numeric display
- Built-in control LSI HD44780 type (see page 7)

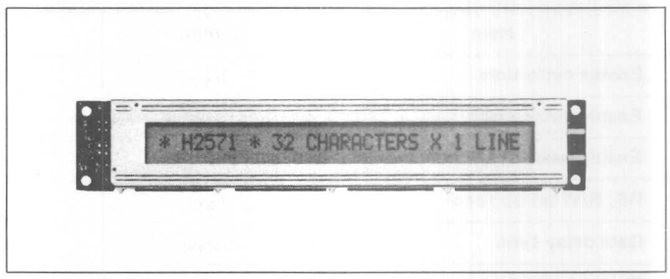

MECHANICAL DATA (Nominal dimensions)

Module size	174.5W x 31.0H x 13.4D (max) mm
Effective display are	132.5W x 14.0H mm
Character size (5 x 10 dots)	3.15W x 7.9H mm
Pitch	3.85 mm
Dot size	0.55W x 0.7H mm
Weight	about 60 g

ABSOLUTE MAXIMUM RATINGS

	min.	max.
Power supply for logic ($V_{DD}-V_{SS}$)	0	7.0 V
Power supply for LCD drive ($V_{DD}-V_O$)	0	13.5 V
Input voltage (Vi)	V_{SS}	V_{DD} V
Operating temperature (Ta)	0	50°C
Storage temperature (Tstg)	−20	70°C

ELECTRICAL CHARACTERISTICS

Ta = 25°C, V_{DD} = 5.0 V ± 0.25 V

Input "high" voltage (Vi_H)		2.2 V min.
Input "low" voltage (Vi_L)		0.6 V max.
Output high voltage (V_{OH}) ($-I_{OH}$ = 0.2mA)		2.4 V min.
Output low voltage (V_{OL}) (I_{OL} = 1.2 mA)		0.4 V max.
Power supply current (I_{DD}) (V_{DD} = 5.0 V)		0.5 mA typ.
		2.0 mA max.

Power supply for LCD drive (Recommended) ($V_{DD}-V_O$)

	Du=1/8	Du=1/11
at Ta = 0°C	4.0	4.2 V typ.
at Ta = 25°C	3.7	3.8 V typ.
at Ta = 50°C	3.3	3.3 V typ.

OPTICAL DATA . . . . . See page 6

INTERNAL PIN CONNECTION

Pin No.	Symbol	Level	Function	
1	V_{SS}	–	0V	Power supply
2	V_{DD}	–	5V	
3	V_O	–	–	
4	RS	H/L	L: Instruction code input H: Data input	
5	R/W	H/L	H: Data read (LCD module→MPU) L: Data write (LCD module←MPU)	
6	E	H, H→L	Enable signal	
7	DB0	H/L	Data bus line Note (1), Note (2)	
8	DB1	H/L		
9	DB2	H/L		
10	DB3	H/L		
11	DB4	H/L		
12	DB5	H/L		
13	DB6	H/L		
14	DB7	H/L		

Note:

In the HD44780, the data can be sent in either 4-bit 2-operation or 8-bit 1-operation so that it can interface to both 4 and 8 bit MPU's.

(1) When interface data is 4 bits long, data is transferred using only 4 buses of DB_4~DB_7 and DB_0~DB_3 are not used. Data transfer between the HD44780 and the MPU completes when 4-bit data is transferred twice. Data of the higher order 4 bits (contents of DB_4~DB_7 when interface data is 8 bits long) is transferred first and then lower order 4 bits (contents of DB_0~DB_3 when interface data is 8 bits long).

(2) When interface data is 8 bits long, data is transferred using 8 data buses of DB_0~DB_7.

Unit: mm

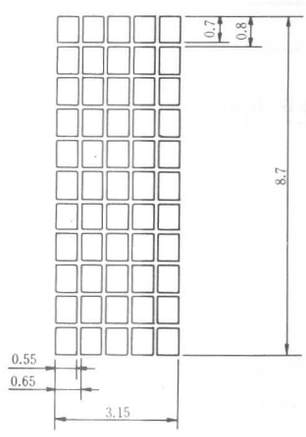

Fig. 1 Display pattern

HITACHI

Unit: mm

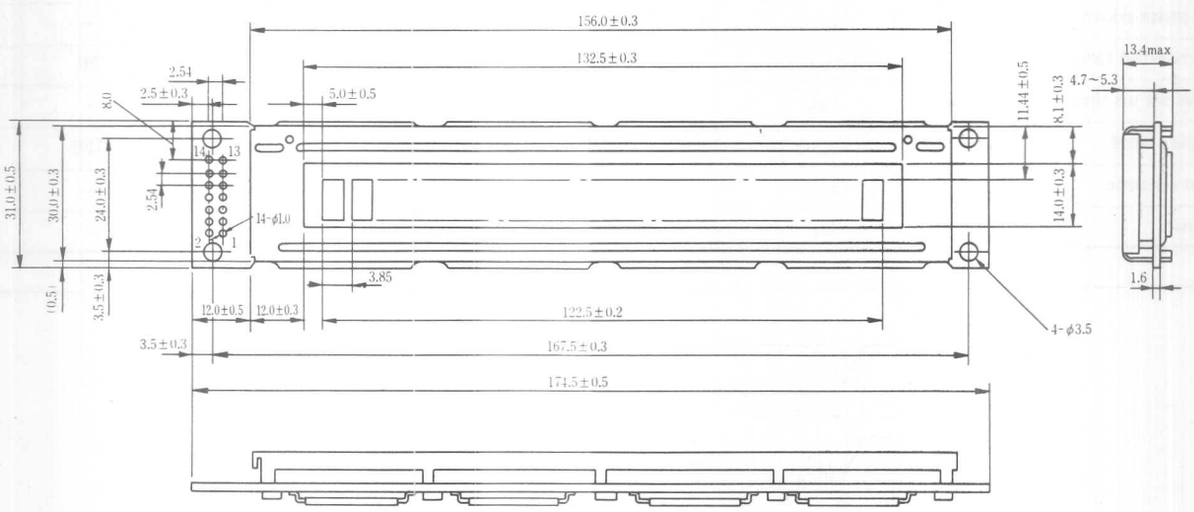

Fig. 2 External dimensions

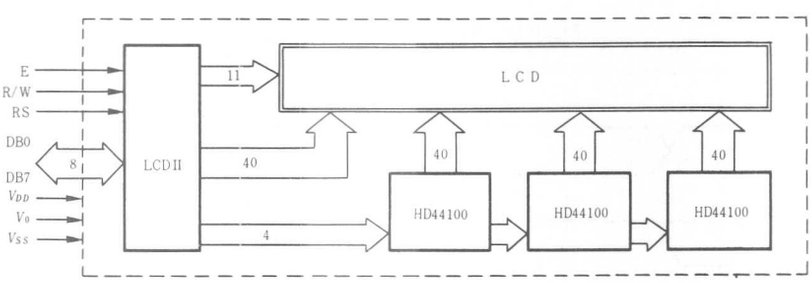

Fig. 3 Block diagram

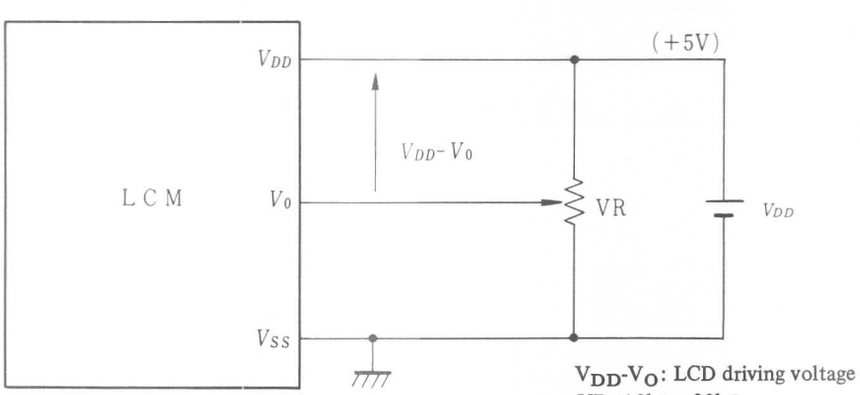

V_{DD}-V_O: LCD driving voltage
VR: 10kΩ~20kΩ

Fig. 4 Power supply

TIMING CHARACTERISTICS

Item	Symbol	Test condition	min.	typ.	max.	Unit
Enable cycle time	t_{cyc}	Fig. 5, Fig. 6	1.0	–	–	μs
Enable pulse width	P_{wEH}	Fig. 5, Fig. 6	450	–	–	ns
Enable rise/fall time	t_{Er}, t_{Ef}	Fig. 5, Fig. 6	–	–	25	ns
RS, R/W set up time	t_{AS}	Fig. 5, Fig. 6	140	–	–	ns
Data delay time	t_{DDR}	Fig. 6	–	–	320	ns
Data set up time	t_{DSW}	Fig. 5	225	–	–	ns
Hold time	t_H	Fig. 5, Fig. 6	10	–	–	ns

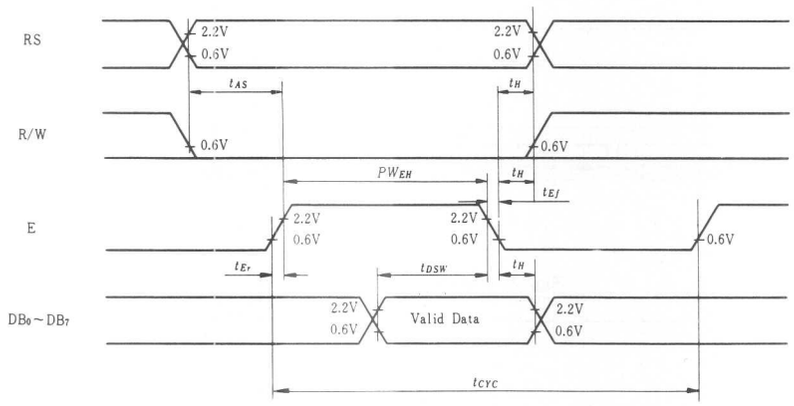

Fig. 5 Interface timing (data write)

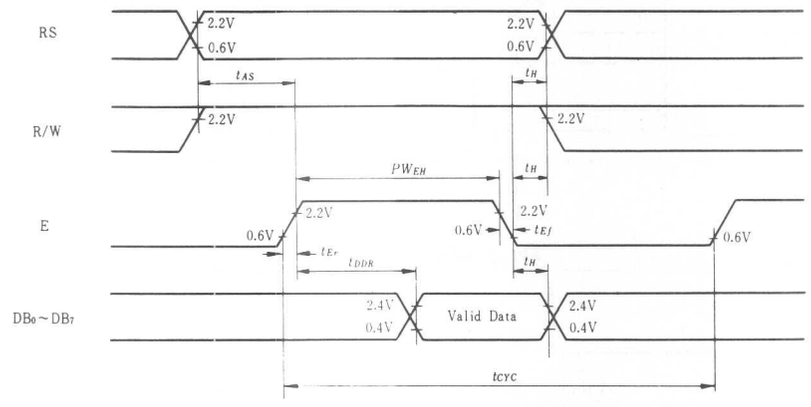

Fig. 6 Interface timing (data read)

H2572

- 40-Position alpha-numeric display
- Built-in control LSI HD44780 type (see page 7)

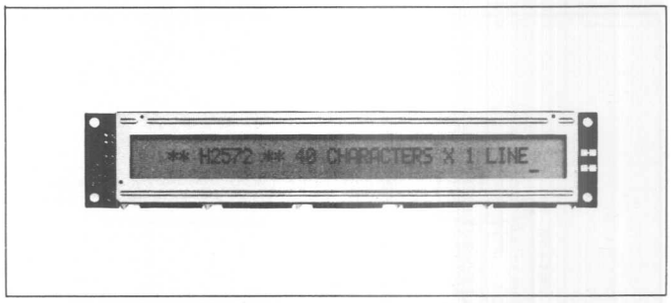

MECHANICAL DATA (Nominal dimensions)

Module size	182W x 33.5H x 13D (max) mm
Effective display area	154.4W x 15.8H mm
Character size (5 x 10 dots)	3.15W x 7.9H mm
Pitch	3.75 mm
Dot size	0.55W x 0.7H mm
Weight	about 65 g

ABSOLUTE MAXIMUM RATINGS

	min.	max.
Power supply for logic ($V_{DD}-V_{SS}$)	0	7.0 V
Power supply for LCD drive ($V_{DD}-V_O$)	0	13.5 V
Input voltage (Vi)	V_{SS}	V_{DD} V
Operating temperature (Ta)	0	50°C
Storage temperature (Tstg)	−20	70°C

ELECTRICAL CHARACTERISTICS

Ta = 25°C, V_{DD} = 5.0 V ± 0.25 V

Input "high" voltage (Vi_H)	2.2 V min.	
Input "low" voltage (Vi_L)	0.6 V max.	
Output high voltage (V_{OH}) ($-I_{OH}$=0.2mA)	2.4 V min.	
Output low voltage (V_{OL}) (I_{OL}=1.2mA)	0.4 V max.	
Power supply current (I_{DD}) (V_{DD} = 5.0 V)	0.5 mA typ.	2.0 mA max.

Power supply for LCD drive (Recommended) ($V_{DD}-V_O$)

	Du=1/8	Du=1/11
at Ta = 0°C	4.0	4.2 V typ.
at Ta = 25°C	3.7	3.8 V typ.
at Ta = 50°C	3.3	3.3 V typ.

OPTICAL DATA ..... See page 6

INTERNAL PIN CONNECTION

Pin No.	Symbol	Level	Function	
1	V_{SS}	–	0V	Power supply
2	V_{DD}	–	5V	
3	V_O	–	–	
4	RS	H/L	L: Instruction code input H: Data input	
5	R/W	H/L	H: Data read (LCD module→MPU) L: Data write (LCD module←MPU)	
6	E	H, H→L	Enable signal	
7	DB0	H/L	Data bus line Note (1), Note (2)	
8	DB1	H/L		
9	DB2	H/L		
10	DB3	H/L		
11	DB4	H/L		
12	DB5	H/L		
13	DB6	H/L		
14	DB7	H/L		

Note:

In the HD44780, the data can be sent in either 4-bit 2-operation or 8-bit 1-operation so that it can interface to both 4 and 8 bit MPU's.

(1) When interface data is 4 bits long, data is transferred using only 4 buses of DB_4~DB_7 and DB_0~DB_3 are not used. Data transfer between the HD44780 and the MPU completes when 4-bit data is transferred twice. Data of the higher order 4 bits (contents of DB_4~DB_7 when interface data is 8 bits long) is transferred first and then lower order 4 bits (contents of DB_0~DB_3 when interface data is 8 bits long).

(2) When interface data is 8 bits long, data is transferred using 8 data buses of DB_0~DB_7.

Unit: mm

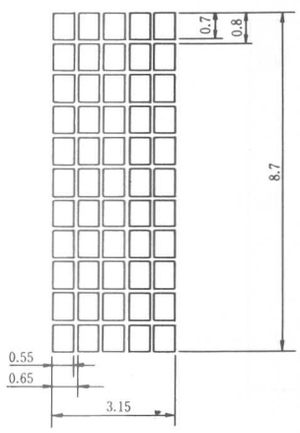

Fig. 1 Display pattern

Unit: mm

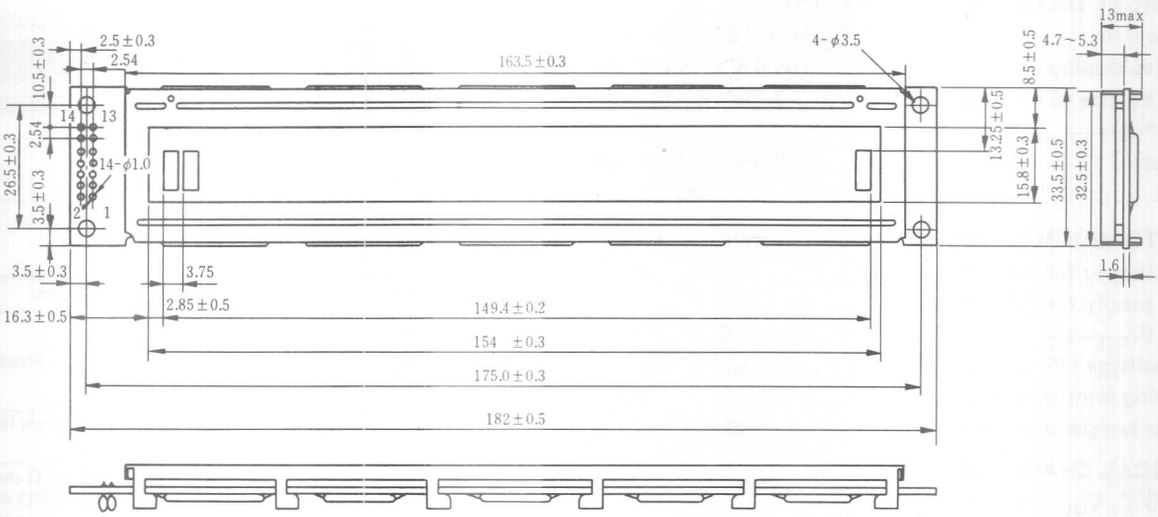

Fig. 2 External dimensions

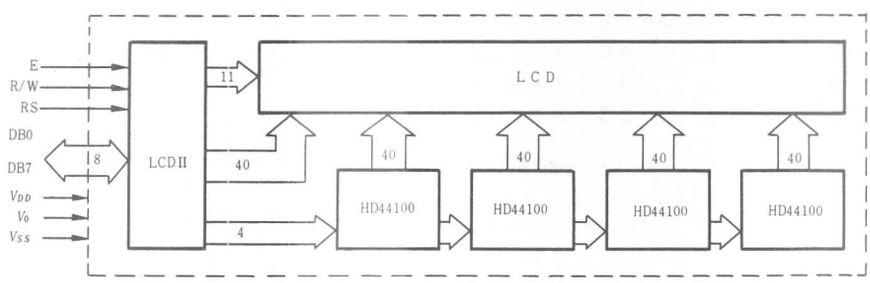

Fig. 3 Block diagram

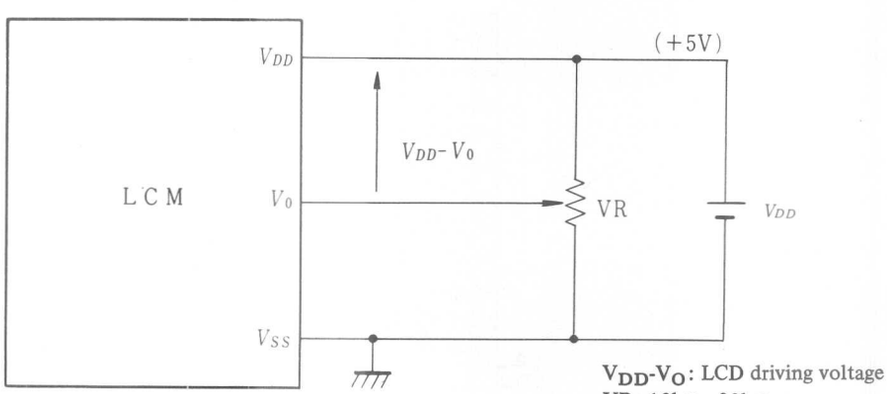

V_{DD}-V_O: LCD driving voltage
VR: 10kΩ~20kΩ

Fig. 4 Power supply

TIMING CHARACTERISTICS

Item	Symbol	Test condition	min.	typ.	max.	Unit
Enable cycle time	t_{cyc}	Fig. 5, Fig. 6	1.0	–	–	μs
Enable pulse width	P_{wEH}	Fig. 5, Fig. 6	450	–	–	ns
Enable rise/fall time	t_{Er}, t_{Ef}	Fig. 5, Fig. 6	–	–	25	ns
RS, R/W set up time	t_{AS}	Fig. 5, Fig. 6	140	–	–	ns
Data delay time	t_{DDR}	Fig. 6	–	–	320	ns
Data set up time	t_{DSW}	Fig. 5	225	–	–	ns
Hold time	t_H	Fig. 5, Fig. 6	10	–	–	ns

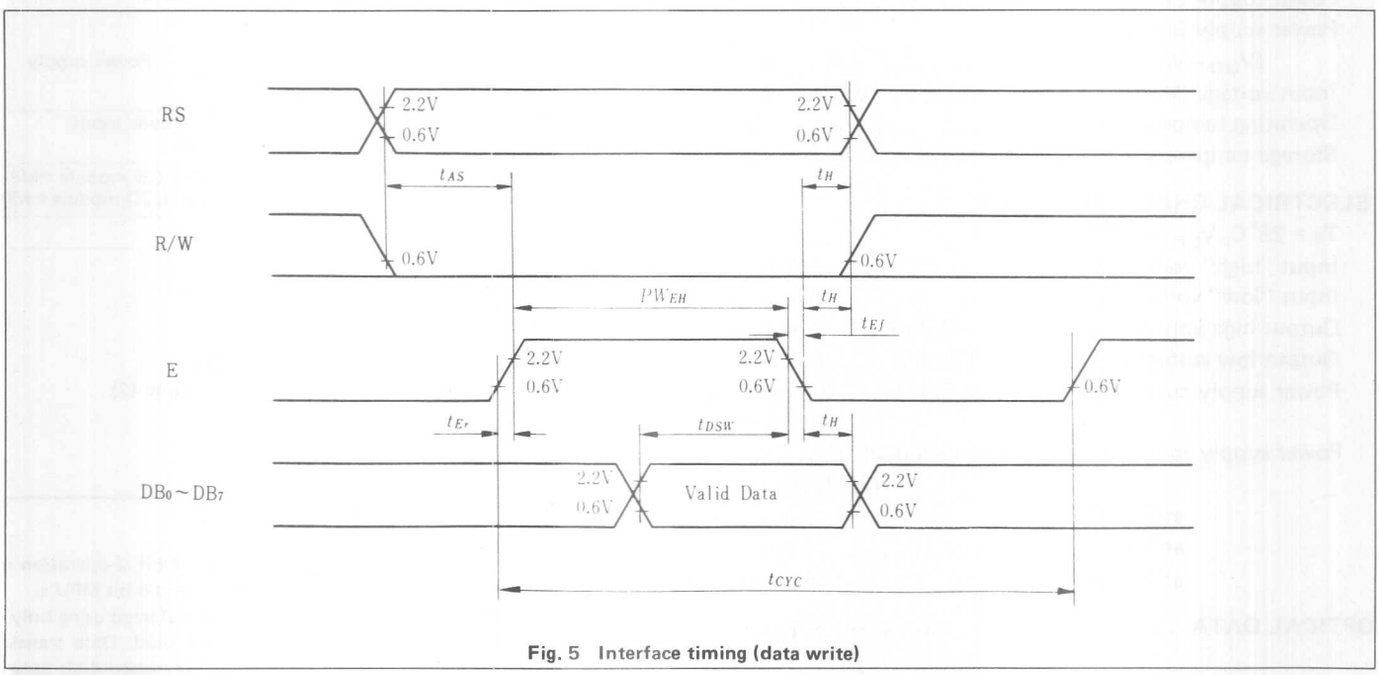

Fig. 5 Interface timing (data write)

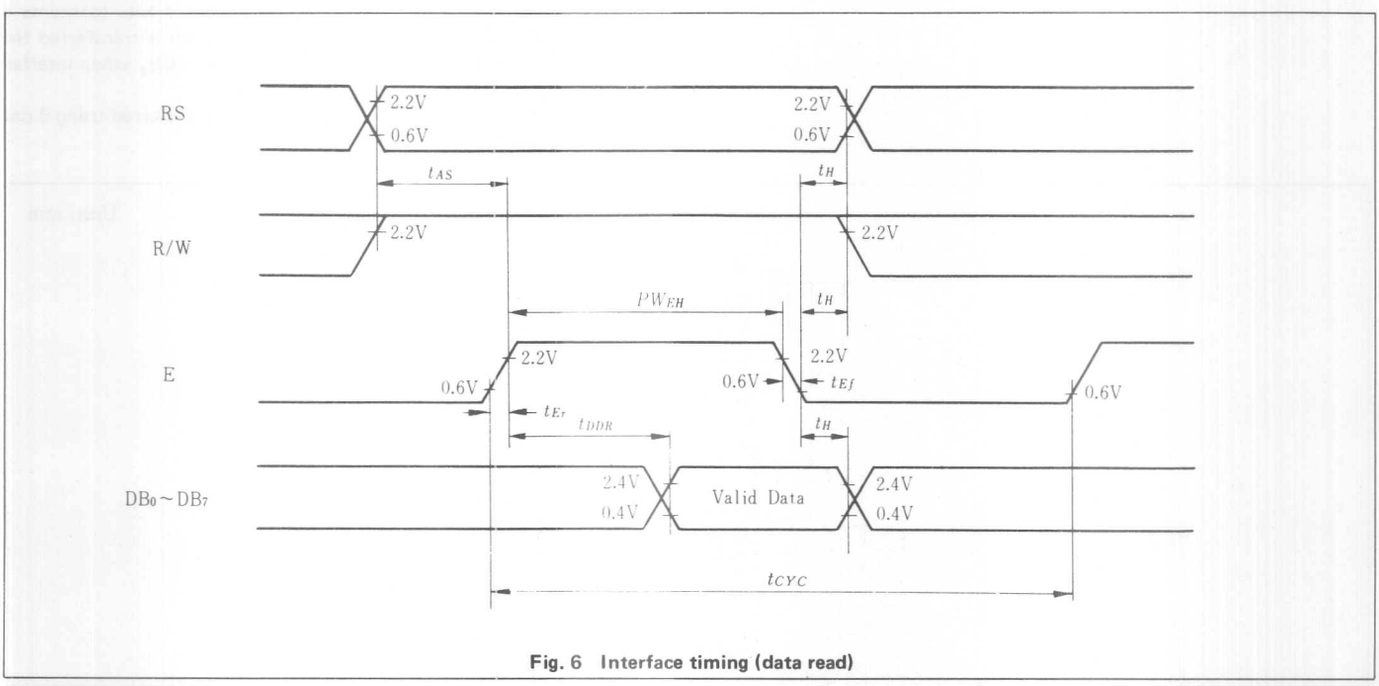

Fig. 6 Interface timing (data read)

LM016

- 32-Position alpha-numeric display.
- Built-in control LSI HD44780 type (see page 7)

MECHANICAL DATA (Nominal dimensions)

Module size	84W x 44H x 15D (max) mm
Effective display area	61W x 15.8H mm
Character size (5 x 7 dots)	2.95W x 4.85H mm
Pitch	3.55 mm
Dot size	0.55W x 0.65H mm
Weight	about 25 g

ABSOLUTE MAXIMUM RATINGS

	min.	max.
Power supply for logic ($V_{DD}-V_{SS}$)	0	7.0 V
Power supply for LCD drive ($V_{DD}-V_O$)	0	13.5 V
Input voltage (Vi)	V_{SS}	V_{DD} V
Operating temperature (TA)	0	50°C
Storage temperature (Tstg)	−20	70°C

ELECTRICAL CHARACTERISTICS

Ta = 25°C, V_{DD} = 5.0 V ± 0.25 V

Input "high" voltage (Vi_H)	2.2 V min.
Input "low" voltage (Vi_L)	0.6 V max.
Output high voltage (V_{OH}) ($-I_{OH}$ = 0.2 mA)	2.4 V min.
Output low voltage (V_{OL}) (I_{OL} = 1.2 mA)	0.4 V max.
Power supply current (I_{DD}) (V_{DD} = 5.0 V)	0.5 mA typ. 3.0 mA max.
Power supply for LCD drive (Recommended) ($V_{DD}-V_O$) Du=1/16	
at Ta = 0°C	5.4 V typ.
at Ta = 25°C	4.8 V typ.
at Ta = 50°C	4.0 V typ.

OPTICAL DATA . . . . . See page 6

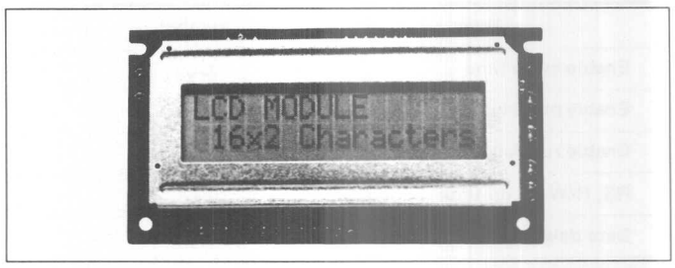

INTERNAL PIN CONNECTION

Pin No.	Symbol	Level	Function	
1	V_{SS}	—	0V	Power supply
2	V_{DD}	—	5V	
3	V_O	—	—	
4	RS	H/L	L: Instruction code input H: Data input	
5	R/W	H/L	H: Data read (LCD module→MPU) L: Data write (LCD module←MPU)	
6	E	H, H→L	Enable signal	
7	DB0	H/L	Data bus line Note (1), Note (2)	
8	DB1	H/L		
9	DB2	H/L		
10	DB3	H/L		
11	DB4	H/L		
12	DB5	H/L		
13	DB6	H/L		
14	DB7	H/L		

Note:

In the HD44780, the data can be sent in either 4-bit 2-operation or 8-bit 1-operation so that it can interface to both 4 and 8 bit MPU's.

(1) When interface data is 4 bits long, data is transferred using only 4 buses of DB_4~DB_7 and DB_0~DB_3 are not used. Data transfer between the HD44780 and the MPU completes when 4-bit data is transferred twice. Data of the higher order 4 bits (contents of DB_4~DB_7 when interface data is 8 bits long) is transferred first and then lower order 4 bits (contents of DB_0~DB_3 when interface data is 8 bits long).

(2) When interface data is 8 bits long, data is transferred using 8 data buses of DB_0~DB_7.

Unit: mm

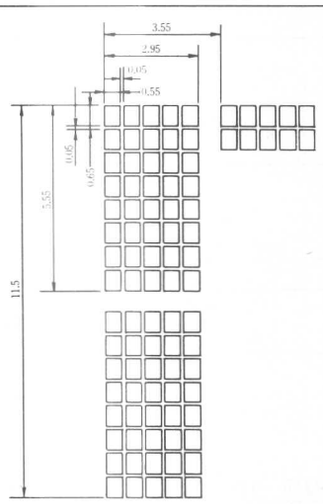

Fig. 1 Display pattern

HITACHI

Unit: mm

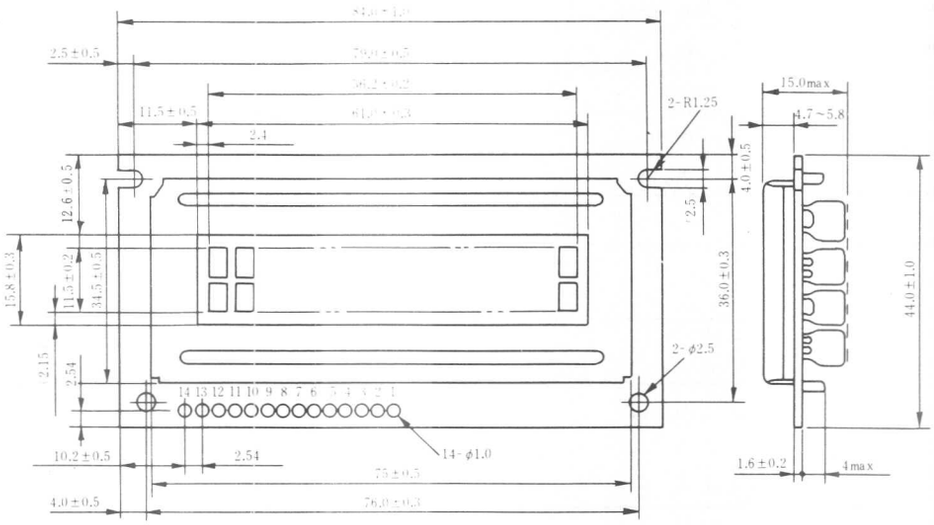

Fig. 2 External dimensions

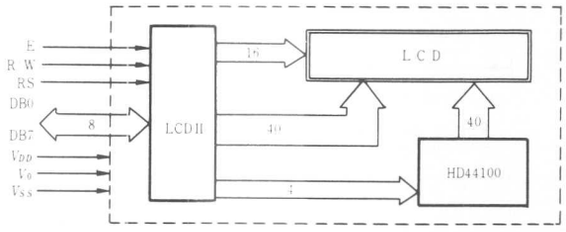

Fig. 3 Block diagram

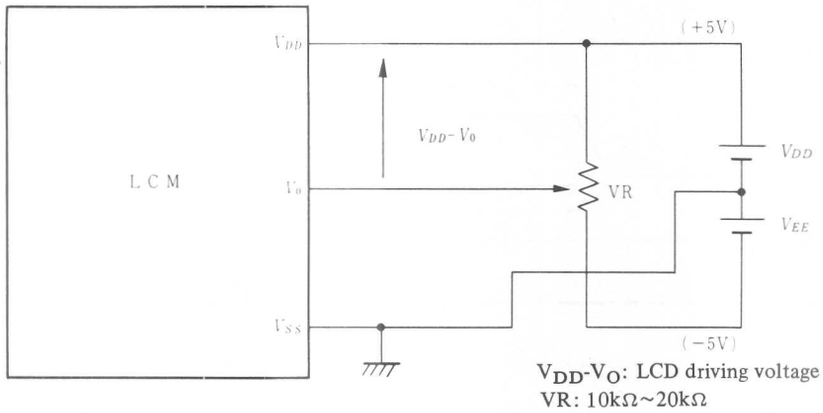

V_{DD}-V_O: LCD driving voltage
VR: 10kΩ~20kΩ

Fig. 4 Power supply

TIMING CHARACTERISTICS

Item	Symbol	Test condition	min.	typ.	max.	Unit
Enable cycle time	t_{cyc}	Fig. 5, Fig. 6	1.0	–	–	μs
Enable pulse width	P_{wEH}	Fig. 5, Fig. 6	450	–	–	ns
Enable rise/fall time	t_{Er}, t_{Ef}	Fig. 5, Fig. 6	–	–	25	ns
RS, R/W set up time	t_{AS}	Fig. 5, Fig. 6	140	–	–	ns
Data delay time	t_{DDR}	Fig. 6	–	–	320	ns
Data set up time	t_{DSW}	Fig. 5	225	–	–	ns
Hold time	t_H	Fig. 5, Fig. 6	10	–	–	ns

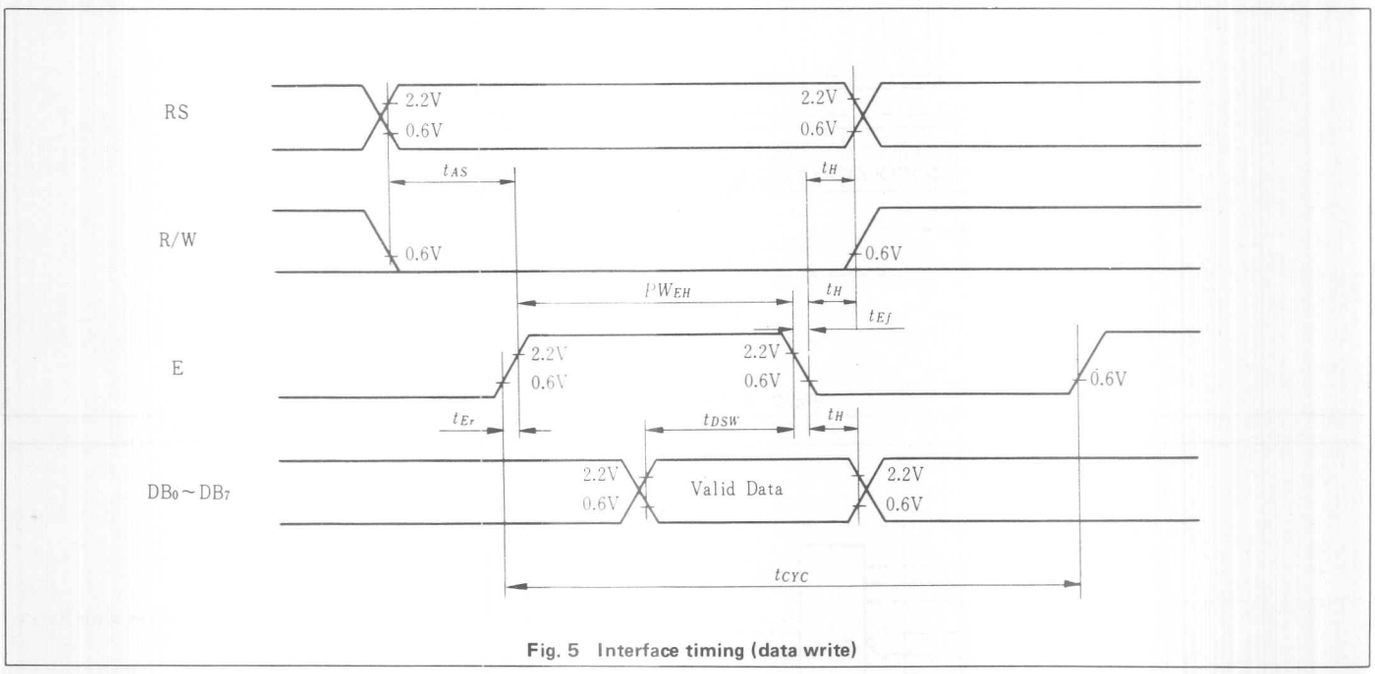

Fig. 5 Interface timing (data write)

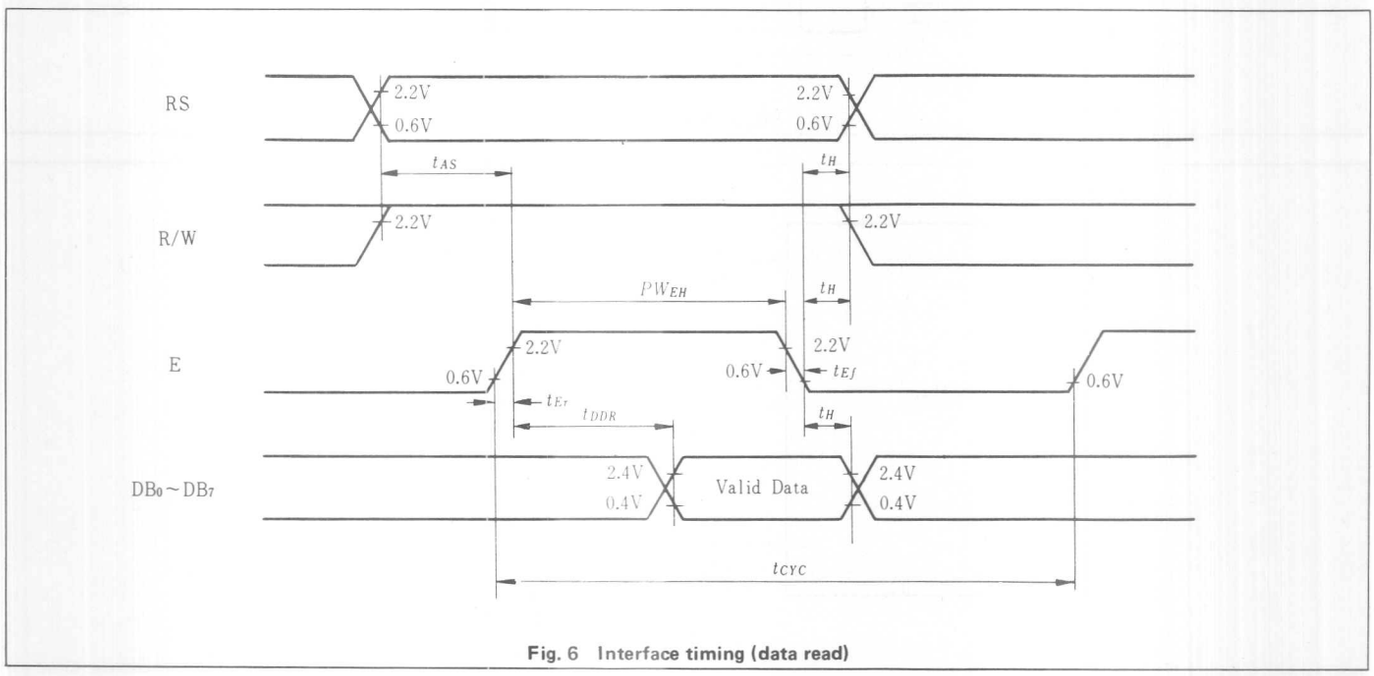

Fig. 6 Interface timing (data read)

LM032

- 40-Position alpha-numeric display
- Built-in control LSI HD44780 type (see page 7)

MECHANICAL DATA (Nominal dimensions)

Module size	116W x 37H (max) x 13D (max) mm
Effective display area	83W x 18.6H mm
Character size (5 x 7 dots)	3.2W x 4.85H mm
Pitch	3.7 mm
Dot size	0.6W x 0.65H mm
Weight	about 50 g

ABSOLUTE MAXIMUM RATINGS

	min.	max.
Power supply for logic ($V_{DD}-V_{SS}$)	0	7.0 V
Power supply for LCD drive ($V_{DD}-V_O$)	0	13.5 V
Input voltage (Vi)	V_{SS}	V_{DD} V
Operating temperature (Ta)	0	50°C
Storage temperature (Tstg)	–20	70°C

ELECTRICAL CHARACTERISTICS

Ta = 25°C, V_{DD} = 5.0 V ± 0.25 V

Input "high" voltage (Vi_H)	2.2 V min.
Input "low" voltage (Vi_L)	0.6 V max.
Output high voltage (V_{OH}) ($-I_{OH}$ = 0.2 mA)	2.4 V min.
Output low voltage (V_{OL}) (I_{OL} = 1.2 mA)	0.4 V max.
Power supply current (I_{DD}) (V_{DD} = 5.0 V)	0.5 mA typ.
	3.0 mA max.
Power supply for LCD drive (Recommended) ($V_{DD}-V_O$) Du=1/16	
at Ta = 0°C	5.5 V typ.
at Ta = 25°C	5.0 V typ.
at Ta = 50°C	4.0 V typ.

OPTICAL DATA See page 6

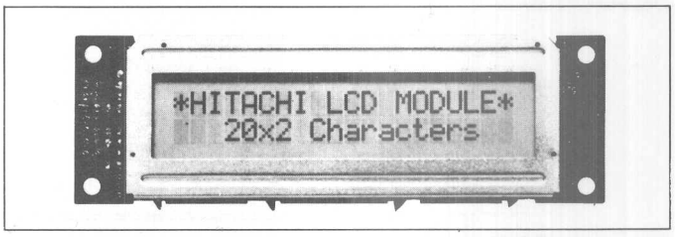

INTERNAL PIN CONNECTION

Pin No.	Symbol	Level	Function	
1	V_{SS}	–	0V	Power supply
2	V_{DD}	–	5V	
3	V_O	–	–	
4	RS	H/L	L: Instruction code input H: Data input	
5	R/W	H/L	H: Data read (LCD module→MPU) L: Data write (LCD module←MPU)	
6	E	H, H→L	Enable signal	
7	DB0	H/L	Data bus line Note (1), Note (2)	
8	DB1	H/L		
9	DB2	H/L		
10	DB3	H/L		
11	DB4	H/L		
12	DB5	H/L		
13	DB6	H/L		
14	DB7	H/L		

Note:

In the HD44780, the data can be sent in either 4-bit 2-operation or 8-bit 1-operation so that it can interface to both 4 and 8 bit MPU's.

(1) When interface data is 4 bits long, data is transferred using only 4 buses of DB_4~DB_7 and DB_0~DB_3 are not used. Data transfer between the HD44780 and the MPU completes when 4-bit data is transferred twice. Data of the higher order 4 bits (contents of DB_4~DB_7 when interface data is 8 bits long) is transferred first and then lower order 4 bits (contents of DB_0~DB_3 when interface data is 8 bits long).

(2) When interface data is 8 bits long, data is transferred using 8 data buses of DB_0~DB_7.

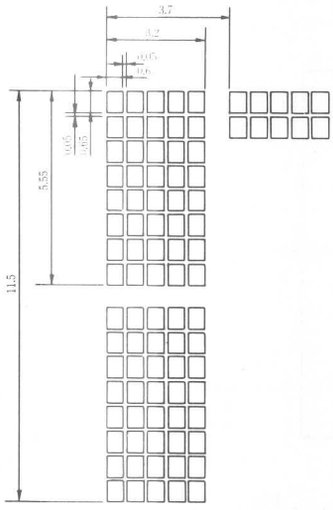

Fig. 1 Display pattern

Unit: mm

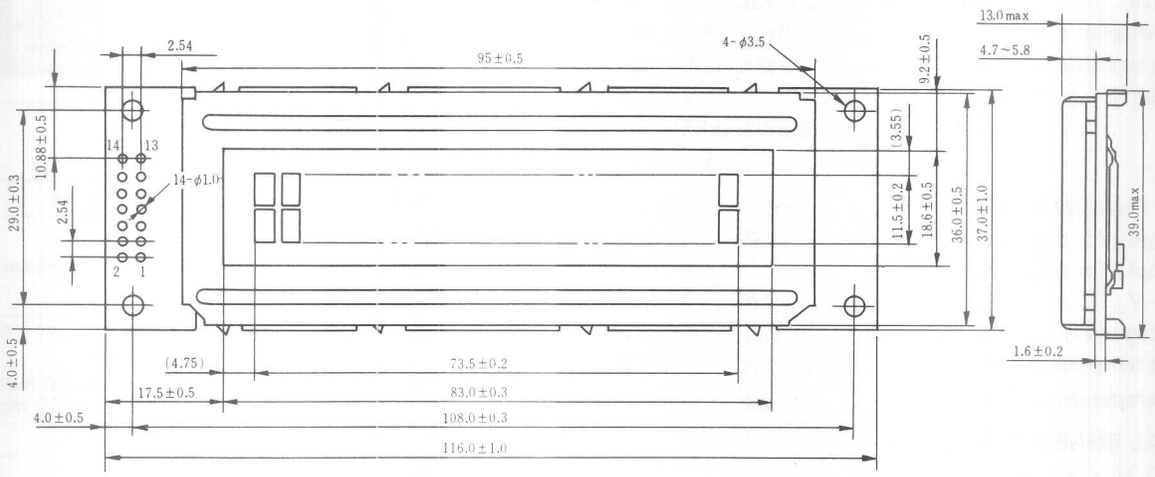

Fig. 2 External dimensions

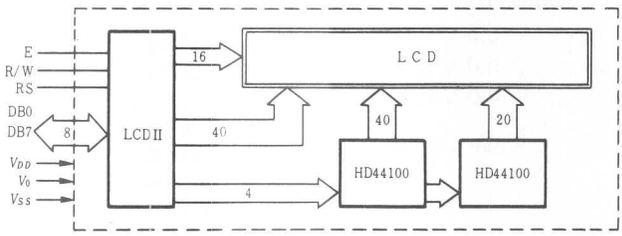

Fig. 3 Block diagram

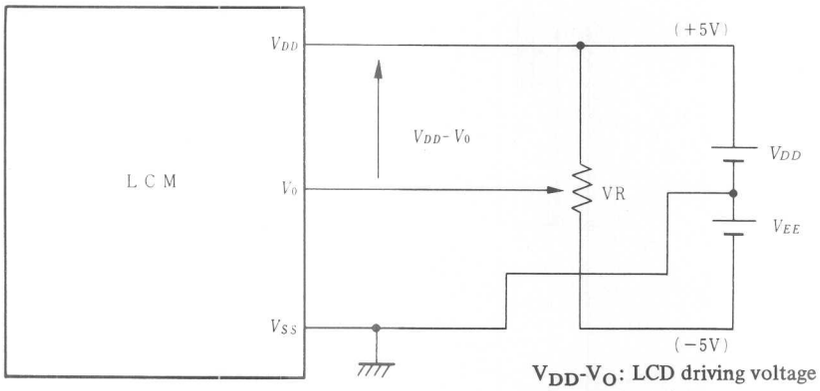

V_{DD}-V_O: LCD driving voltage
VR: 10kΩ~20kΩ

Fig. 4 Power supply

TIMING CHARACTERISTICS

Item	Symbol	Test condition	min.	typ.	max.	Unit
Enable cycle time	t_{cyc}	Fig. 5, Fig. 6	1.0	–	–	μs
Enable pulse width	P_{wEH}	Fig. 5, Fig. 6	450	–	–	ns
Enable rise/fall time	t_{Er}, t_{Ef}	Fig. 5, Fig. 6	–	–	25	ns
RS, R/W set up time	t_{AS}	Fig. 5, Fig. 6	140	–	–	ns
Data delay time	t_{DDR}	Fig. 6	–	–	320	ns
Data set up time	t_{DSW}	Fig. 5	225	–	–	ns
Hold time	t_H	Fig. 5, Fig. 6	10	–	–	ns

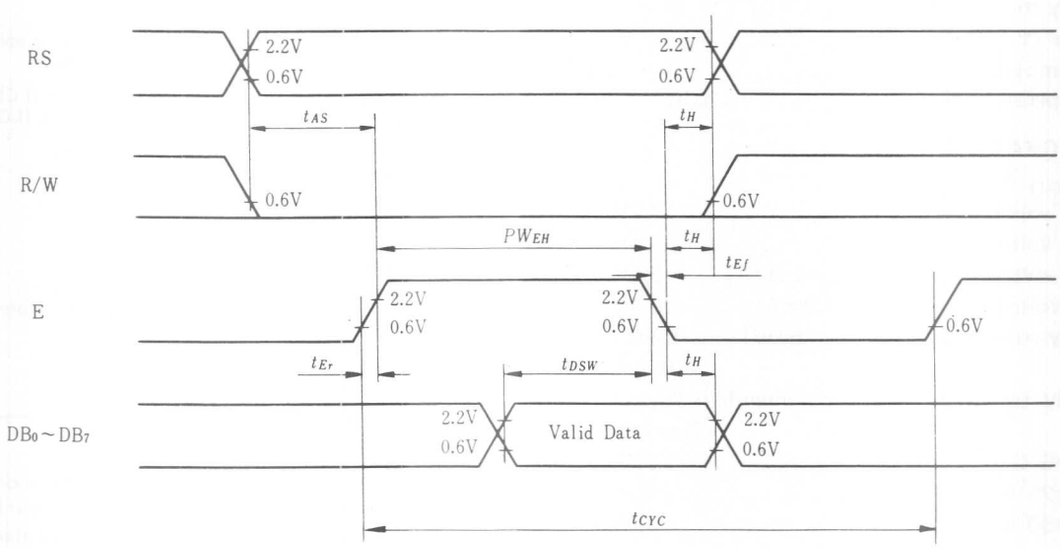

Fig. 5 Interface timing (data write)

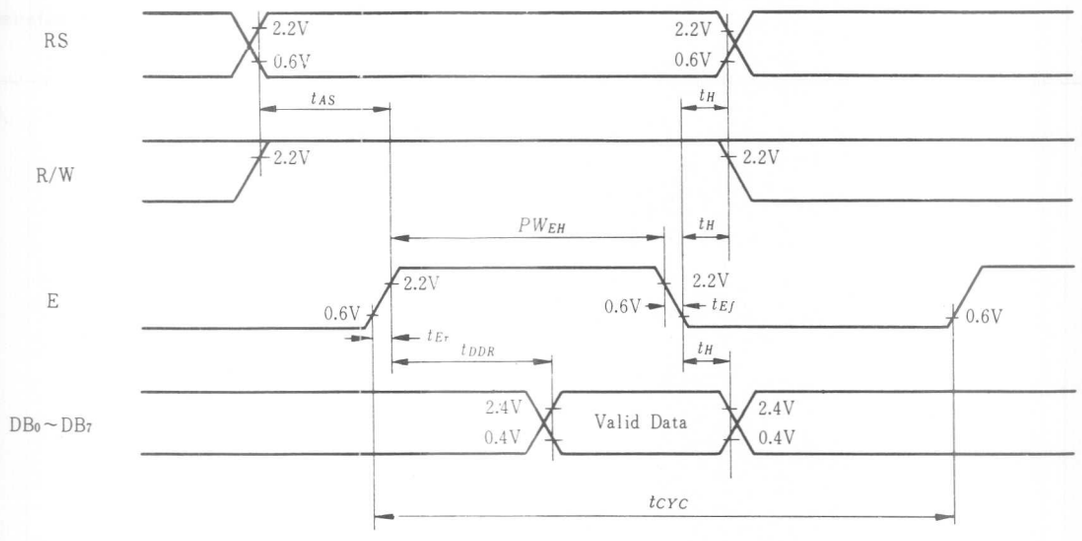

Fig. 6 Interface timing (data read)

LM017

- 64-Position alpha-numeric display
- Built-in control LSI HD44780 type (see page 7)

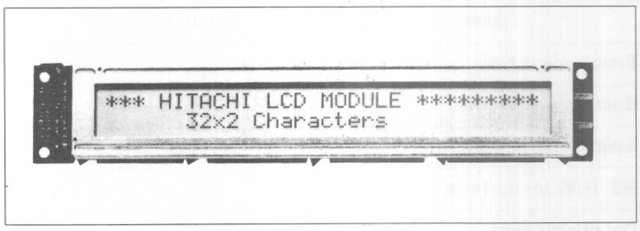

MECHANICAL DATA (Nominal dimensions)

Module size	174.5W x 31H x 13.4D(max) mm
Effective display area	141.19W x 16.75H mm
Character size (5 x 7 dots)	3.45W x 4.85H mm
Pitch	4.2 mm
Dot size	0.65W x 0.65H mm
Weight	about 60g

ABSOLUTE MAXIMUM RATINGS

	min.	max.
Power supply for logic ($V_{DD}-V_{SS}$)	0	7.0V
power supply for LCD drive ($V_{DD}-V_O$)	0	13.5V
Input voltage (Vi)	V_{SS}	V_{DD} V
Operating temperature (Ta)	0	50°C
Storage temperature (Tstg)	−20°C	70°C

ELECTRICAL CHARACTRISTICS

Ta=25°C, V_{DD}=5.0V ±0.25V

Input "high" voltage (V_{IH})	2.2V min.
Input "low" voltage (V_{IL})	0.6V max.
Output high voltage (V_{OH}) ($-I_{OH}$=0.2mA)	2.4V min.
Output low voltage (V_{OL}) (I_{OL}=1.2mA)	0.4V min.
Power supply current (I_{DD}) (V_{DD}=5.0V)	0.5mA typ.
	3.0 mA max.
Power supply for LCD drive (Recommended) ($V_{DD}-V_O$)	Du=1/16
at Ta=0°C	5.4V typ.
at Ta=25°C	4.8V typ.
at Ta=50°C	4.0V typ.

OPTICAL DATA See page 6

INTERNAL PIN CONNECTION

Pin No.	Symbol	Level	Function	
1	V_{SS}	–	0V	Power supply
2	V_{DD}	–	5V	
3	V_O	–	–	
4	RS	H/L	L: Instruction code input H: Data input	
5	R/W	H/L	H: Data read (LCD module→MPU) L: Data write (LCD module←MPU)	
6	E	H, H→L	Enable signal	
7	DB0	H/L	Data bus line Note (1), Note (2)	
8	DB1	H/L		
9	DB2	H/L		
10	DB3	H/L		
11	DB4	H/L		
12	DB5	H/L		
13	DB6	H/L		
14	DB7	H/L		

Note:

In the HD44780, the data can be sent in either 4-bit 2-operation or 8-bit 1-operation so that it can interface to both 4 and 8 bit MPU's.

(1) When interface data is 4 bits long, data is transferred using only 4 buses of DB_4~DB_7 and DB_0~DB_3 are not used. Data transfer between the HD44780 and the MPU completes when 4-bit data is transferred twice. Data of the higher order 4 bits (contents of DB_4~DB_7 when interface data is 8 bits long) is transferred first and then lower order 4 bits (contents of DB_0~DB_3 when interface data is 8 bits long).

(2) When interface data is 8 bits long, data is transferred using 8 data buses of DB_0~DB_7.

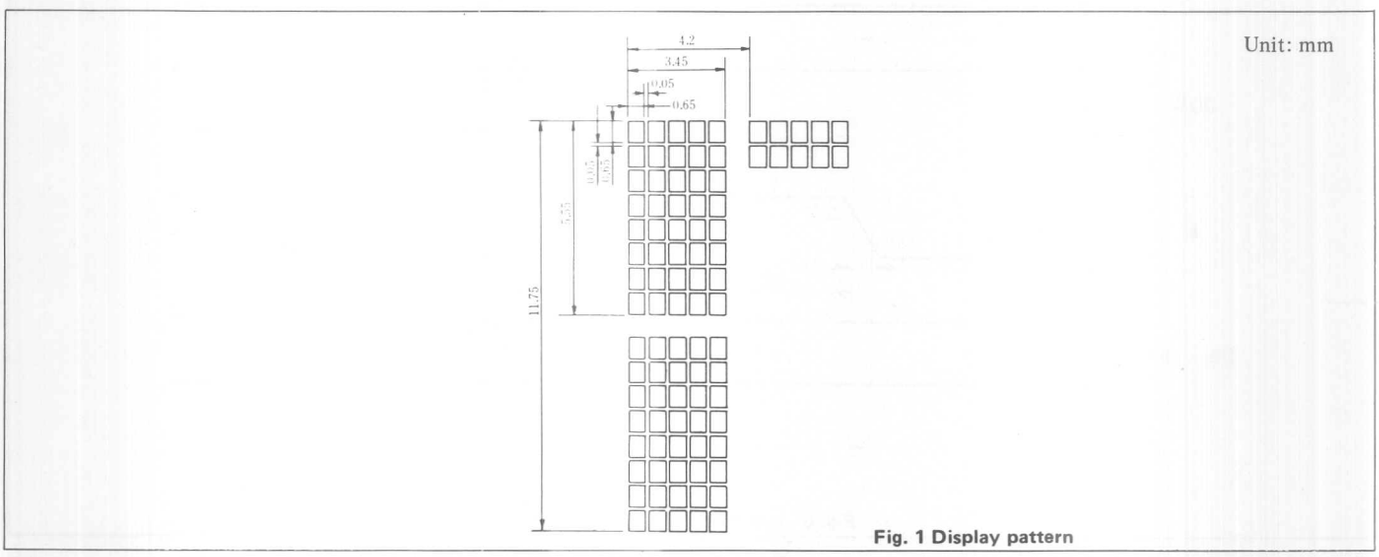

Fig. 1 Display pattern

HITACHI

Unit: mm

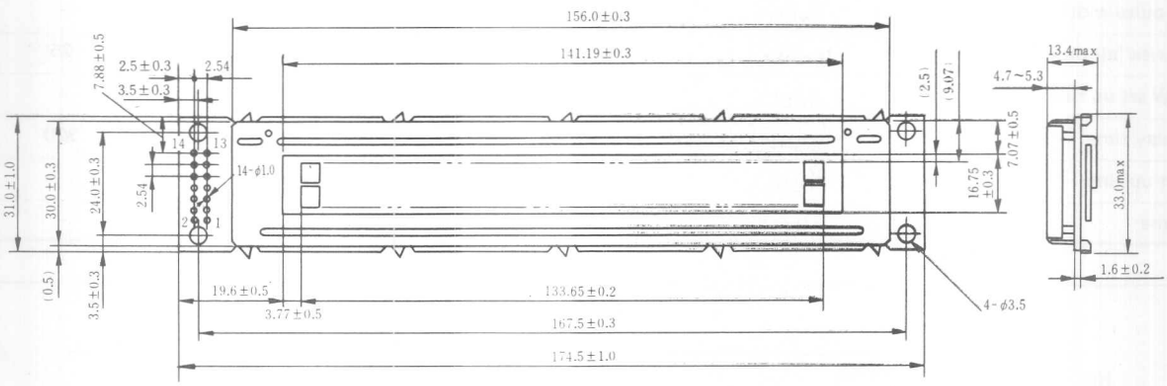

Fig. 2 External dimensions

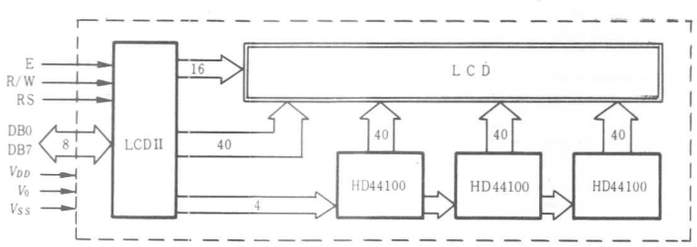

Fig. 3 Block diagram

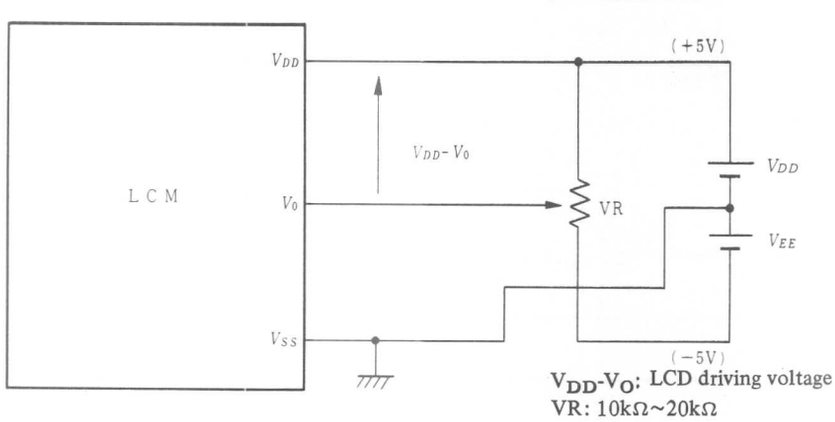

Fig. 4 Power supply

TIMING CHARACTERISTICS

Item	Symbol	Test condition	min.	typ.	max.	Unit
Enable cycle time	t_{cyc}	Fig. 5, Fig. 6	1.0	–	–	μs
Enable pulse width	P_{wEH}	Fig. 5, Fig. 6	450	–	–	ns
Enable rise/fall time	t_{Er}, t_{Ef}	Fig. 5, Fig. 6	–	–	25	ns
RS, R/W set up time	t_{AS}	Fig. 5, Fig. 6	140	–	–	ns
Data delay time	t_{DDR}	Fig. 6	–	–	320	ns
Data set up time	t_{DSW}	Fig. 5	225	–	–	ns
Hold time	t_H	Fig. 5, Fig. 6	10	–	–	ns

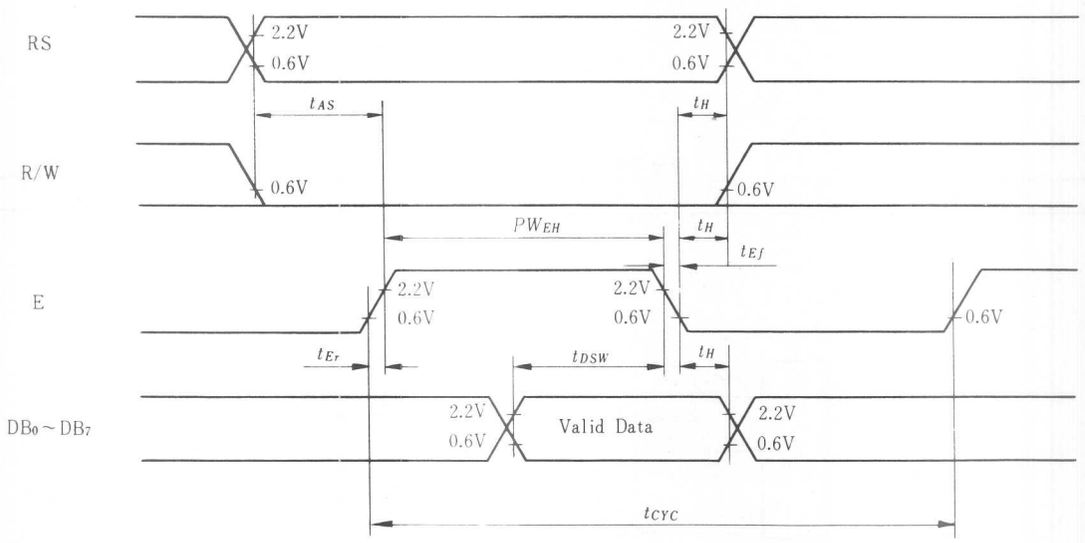

Fig. 5 Interface timing (data write)

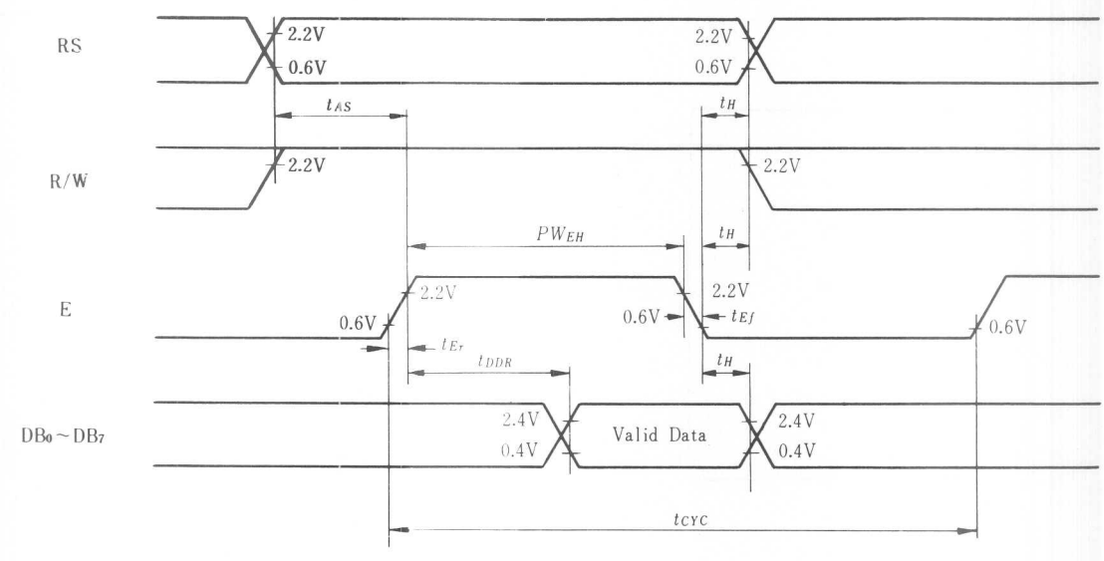

Fig. 6 Interface timing (data read)

LM018

- 80-Position alpha-numeric display
- Built-in control LSI HD44780 type (see page 7)

MECHANICAL DATA (Nominal dimensions)

Module size	182W x 33.5H x 13D (max) mm
Effective display area	154.4W x 15.8H mm
Character size (5 x 7 dots)	3.2W x 4.85H mm
Pitch	3.7 mm
Dot size	0.6W x 0.65H mm
Weight	about 65g

ABSOLUTE MAXIMUM RATINGS

	min.	max.
Power supply for logic ($V_{DD}-V_{SS}$)	0	7.0V
Power supply for LCD drive ($V_{DD}-V_O$)	0	13.5V
Input voltage (V_i)	V_{SS}	V_{DD} V
Operating temperature (Ta)	0	50°C
Storage temperature (Tstg)	−20	70°C

ELECTRICAL CHARACTRISTICS

Ta=25°C, V_{DD}=5.0V ±0.25V

Input "high" voltage (V_{iH})	2.2V min.
Input "low" voltage (V_{iL})	0.6V max.
Output high voltage (V_{OH}) ($-I_{OH}$=0.2mA)	2.4V min.
Output low voltage (V_{OL}) (I_{OL}=1.2mA)	0.4V max.
Power supply current (I_{DD}) (V_{DD}=5.0V)	0.5mA typ.
	3.0mA max.
Power supply for LCD drive (Recommended) ($V_{DD}-V_O$)	Du=1/16
at Ta=0°C	5.4V typ.
at Ta=25°C	5.0V typ.
at Ta=50°C	4.0V typ.

OPTICAL DATA . . . . . See page 6

INTERNAL PIN CONNECTION

Pin No.	Symbol	Level	Function
1	V_{SS}	–	0V — Power supply
2	V_{DD}	–	5V — Power supply
3	V_O	–	– — Power supply
4	RS	H/L	L: Instruction code input H: Data input
5	R/W	H/L	H: Data read (LCD module→MPU) L: Data write (LCD module←MPU)
6	E	H, H→L	Enable signal
7	DB0	H/L	Data bus line Note (1), Note (2)
8	DB1	H/L	
9	DB2	H/L	
10	DB3	H/L	
11	DB4	H/L	
12	DB5	H/L	
13	DB6	H/L	
14	DB7	H/L	

Note:

In the HD44780, the data can be sent in either 4-bit 2-operation or 8-bit 1-operation so that it can interface to both 4 and 8 bit MPU's.

(1) When interface data is 4 bits long, data is transferred using only 4 buses of DB_4~DB_7 and DB_0~DB_3 are not used. Data transfer between the HD44780 and the MPU completes when 4-bit data is transferred twice. Data of the higher order 4 bits (contents of DB_4~DB_7 when interface data is 8 bits long) is transferred first and then lower order 4 bits (contents of DB_0~DB_3 when interface data is 8 bits long).

(2) When interface data is 8 bits long, data is transferred using 8 data buses of DB_0~DB_7.

Unit: mm

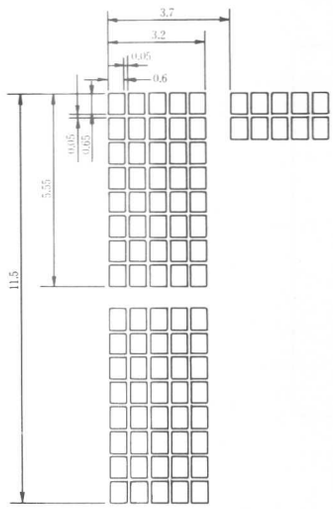

Fig. 1 Display pattern

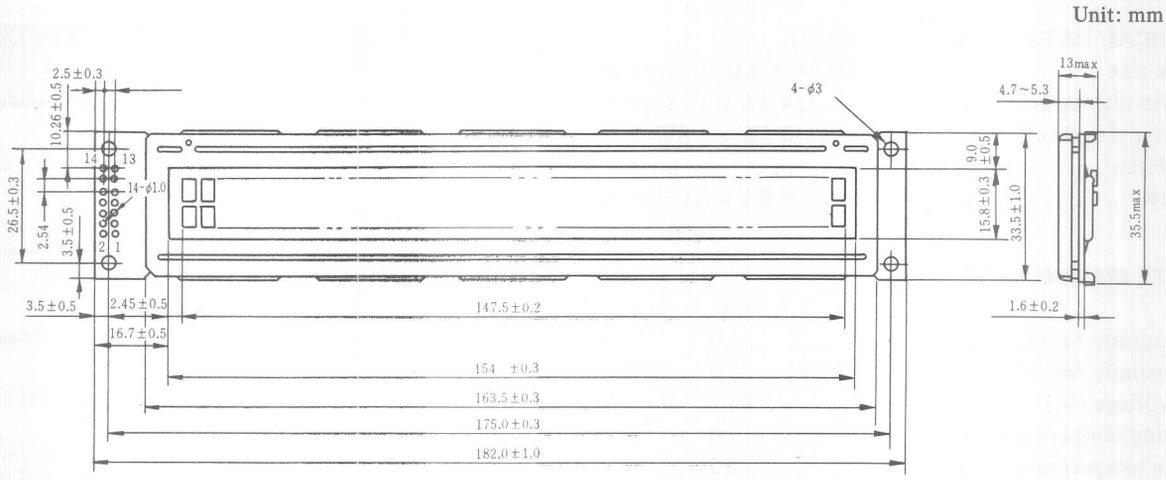

Fig. 2 External dimensions

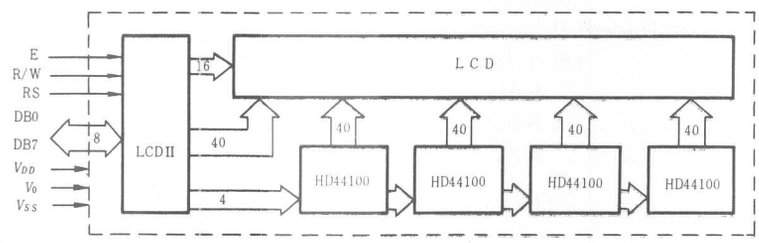

Fig. 3 Block diagram

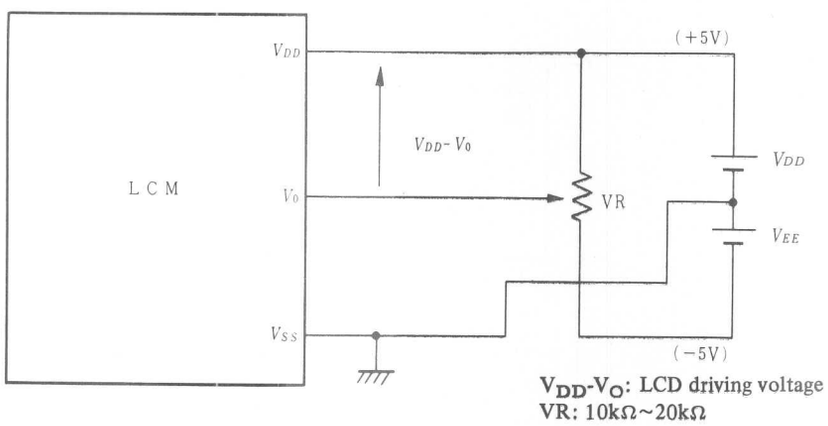

Fig. 4 Power supply

TIMING CHARACTERISTICS

Item	Symbol	Test condition	min.	typ.	max.	Unit
Enable cycle time	t_{cyc}	Fig. 5, Fig. 6	1.0	–	–	μs
Enable pulse width	P_{wEH}	Fig. 5, Fig. 6	450	–	–	ns
Enable rise/fall time	t_{Er}, t_{Ef}	Fig. 5, Fig. 6	–	–	25	ns
RS, R/W set up time	t_{AS}	Fig. 5, Fig. 6	140	–	–	ns
Data delay time	t_{DDR}	Fig. 6	–	–	320	ns
Data set up time	t_{DSW}	Fig. 5	225	–	–	ns
Hold time	t_H	Fig. 5, Fig. 6	10	–	–	ns

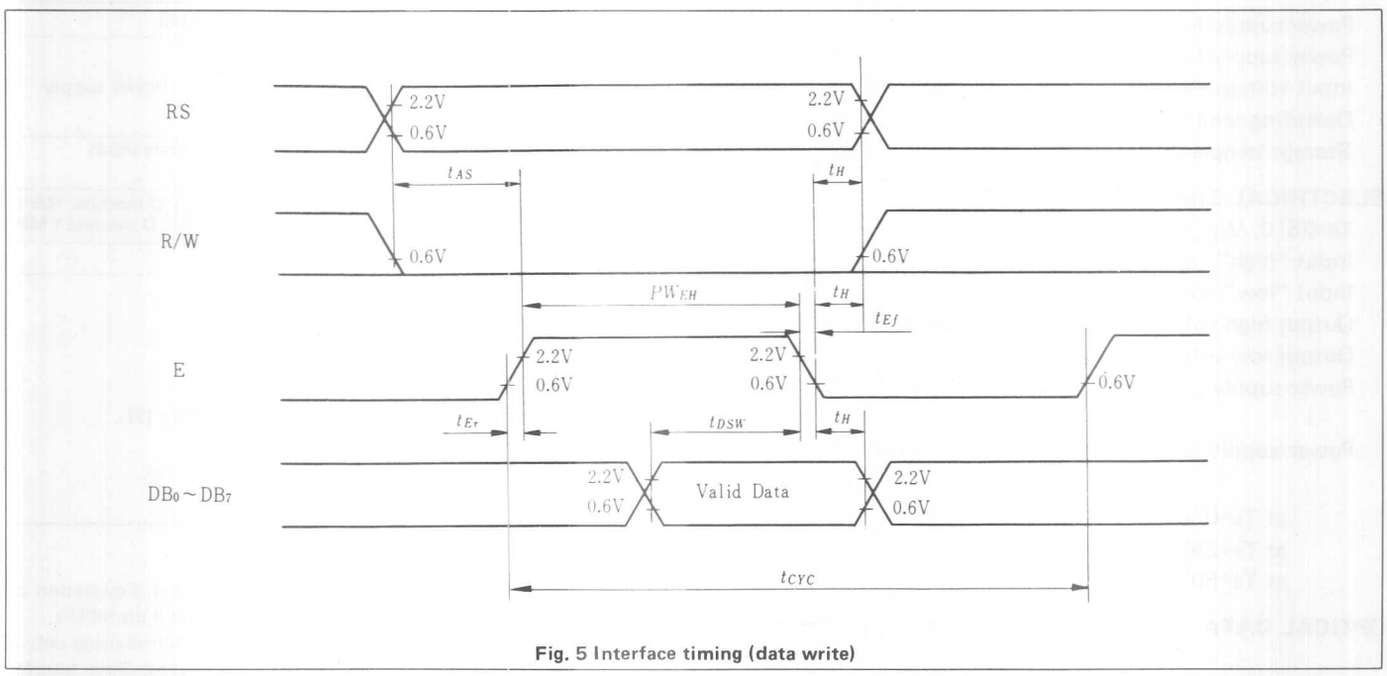

Fig. 5 Interface timing (data write)

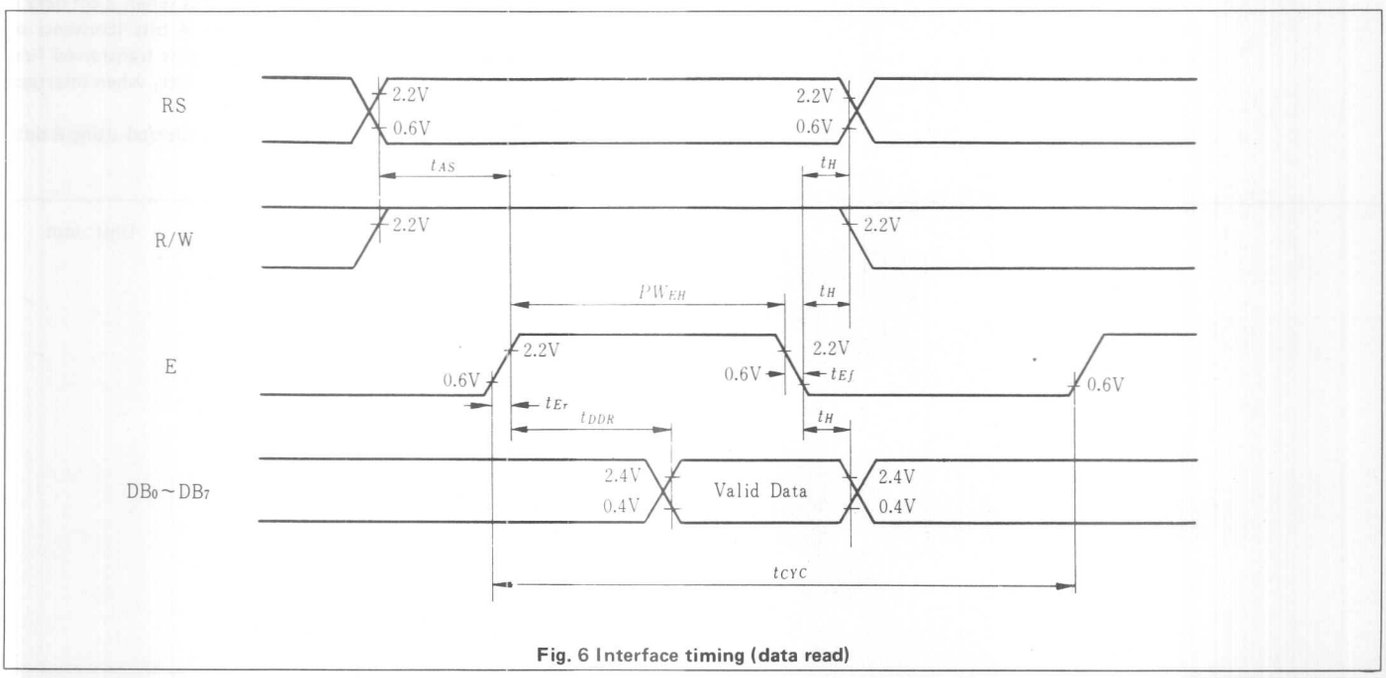

Fig. 6 Interface timing (data read)

LM041

- 64-Position alpha-numeric display
- Built-in control LSI HD44780 type (see page 7)

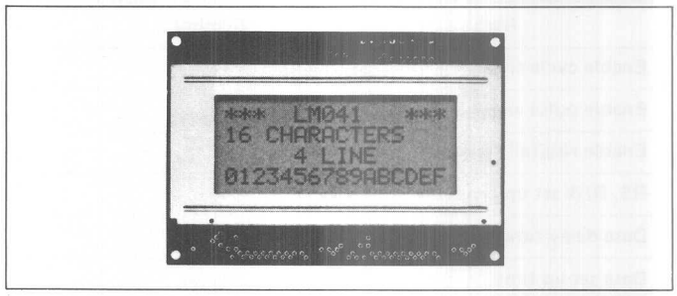

MECHANICAL DATA (Nominal dimensions)

Module size	87W x 60H x 14D (max) mm
Effective display area	61.8W x 25.2H mm
Character size (5 x 7 dots)	2.95W x 4.15H mm
Pitch	3.55 mm
Dot size	0.55W x 0.55H mm
Weight	about 60g

ABSOLUTE MAXIMUM RATINGS

	min.	max.
Power supply for logic ($V_{DD}-V_{SS}$)	0	7.0V
Power supply for LCD drive ($V_{DD}-V_O$)	0	13.5V
Input voltage (V_i)	V_{SS}	V_{DD} V
Operating temperature (Ta)	0	50°C
Storage temperature (Tstg)	−20	70°C

ELECTRICAL CHARACTRISTICS

Ta=25°C, V_{DD}=5.0V±0.25V

Input "high" voltage (V_{IH})	2.2V min.
Input "low" voltage (V_{IL})	0.6V max.
Output high voltage (V_{OH}) ($-I_{OH}$=0.2mA)	0.6V max.
Output low voltage (V_{OL}) (I_{OL}=1.2mA)	0.4V max.
Power supply current (I_{DD}) (V_{DD}=5.0V)	0.5mA typ. 3.0mA max.
Power supply for LCD drive (Recommended) ($V_{DD}-V_O$) Du=1/16	
at Ta=0°C	5.5V typ.
at Ta=25°C	5.0V typ.
at Ta=50°C	4.0V typ.

OPTICAL DATA ..... See page 6

INTERNAL PIN CONNECTION

Pin No.	Symbol	Level	Function	
1	V_{SS}	–	0V	Power supply
2	V_{DD}	–	5V	
3	V_O	–	–	
4	RS	H/L	L: Instruction code input H: Data input	
5	R/W	H/L	H: Data read (LCD module→MPU) L: Data write (LCD module←MPU)	
6	E	H, H→L	Enable signal	
7	DB0	H/L	Data bus line Note (1), Note (2)	
8	DB1	H/L		
9	DB2	H/L		
10	DB3	H/L		
11	DB4	H/L		
12	DB5	H/L		
13	DB6	H/L		
14	DB7	H/L		

Note:

In the HD44780, the data can be sent in either 4-bit 2-operation or 8-bit 1-operation so that it can interface to both 4 and 8 bit MPU's.

(1) When interface data is 4 bits long, data is transferred using only 4 buses of DB_4~DB_7 and DB_0~DB_3 are not used. Data transfer between the HD44780 and the MPU completes when 4-bit data is transferred twice. Data of the higher order 4 bits (contents of DB_4~DB_7 when interface data is 8 bits long) is transferred first and then lower order 4 bits (contents of DB_0~DB_3 when interface data is 8 bits long).

(2) When interface data is 8 bits long, data is transferred using 8 data buses of DB_0~DB_7.

Unit: mm

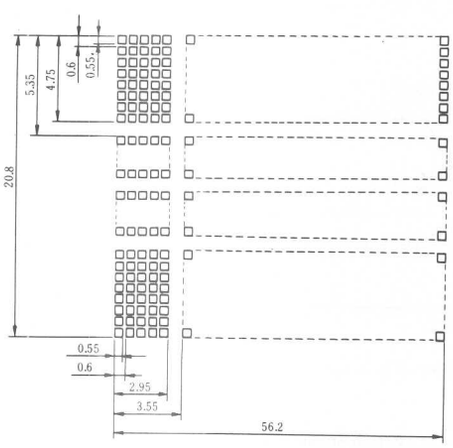

Fig. 1 Display pattern

HITACHI

Unit: mm

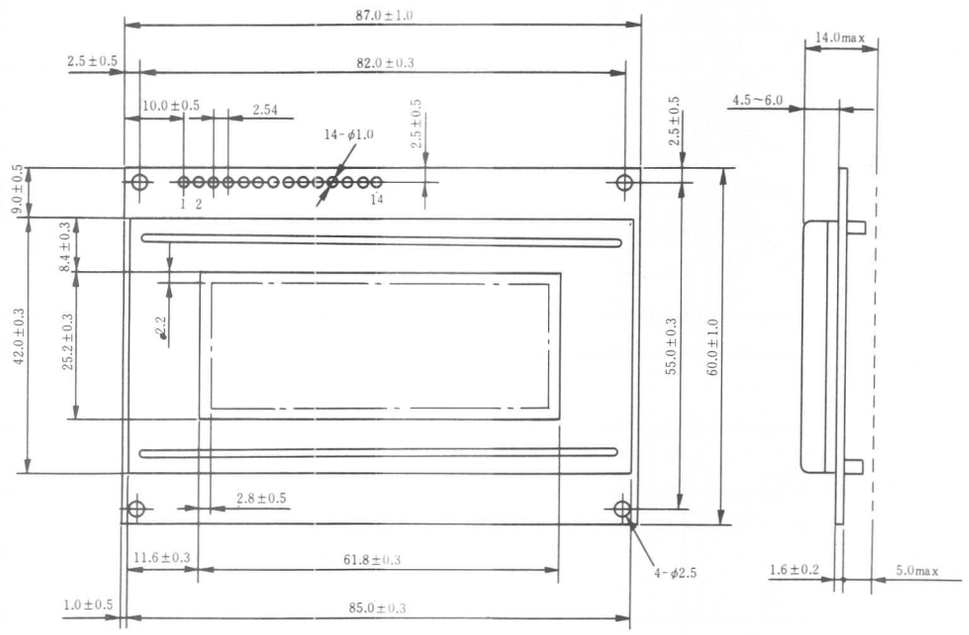

Fig. 2 External dimensions

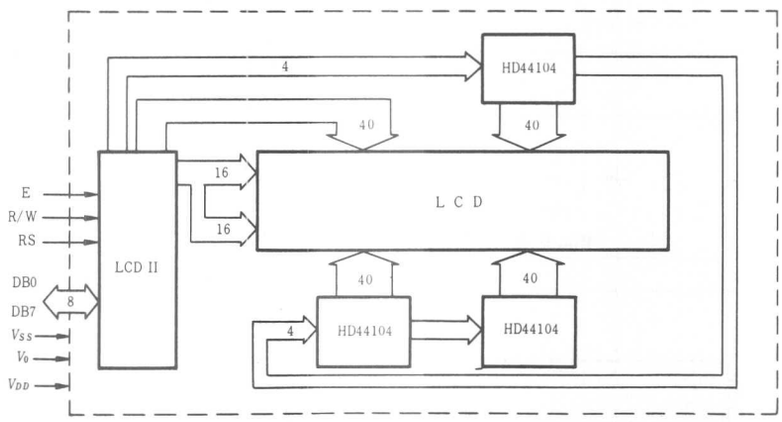

Fig. 3 Block diagram

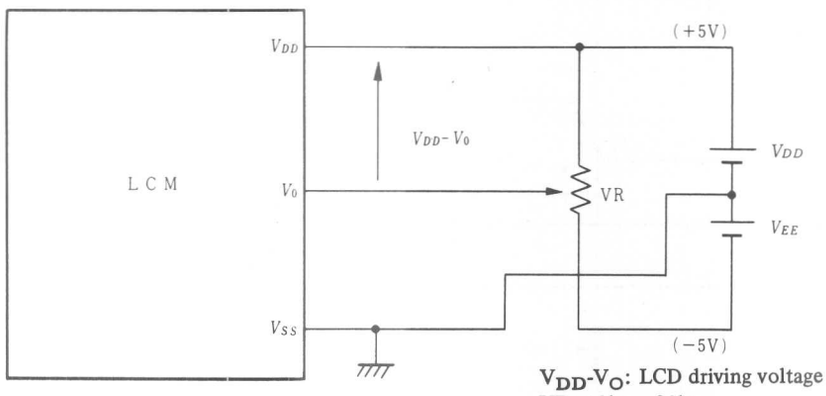

V_{DD}-V_O: LCD driving voltage
VR: 10kΩ~20kΩ

Fig. 4 Power supply

TIMING CHARACTERISTICS

Item	Symbol	Test condition	min.	typ.	max.	Unit
Enable cycle time	t_{cyc}	Fig. 5, Fig. 6	1.0	–	–	μs
Enable pulse width	P_{wEH}	Fig. 5, Fig. 6	450	–	–	ns
Enable rise/fall time	t_{Er}, t_{Ef}	Fig. 5, Fig. 6	–	–	25	ns
RS, R/W set up time	t_{AS}	Fig. 5, Fig. 6	140	–	–	ns
Data delay time	t_{DDR}	Fig. 6	–	–	320	ns
Data set up time	t_{DSW}	Fig. 5	225	–	–	ns
Hold time	t_H	Fig. 5, Fig. 6	10	–	–	ns

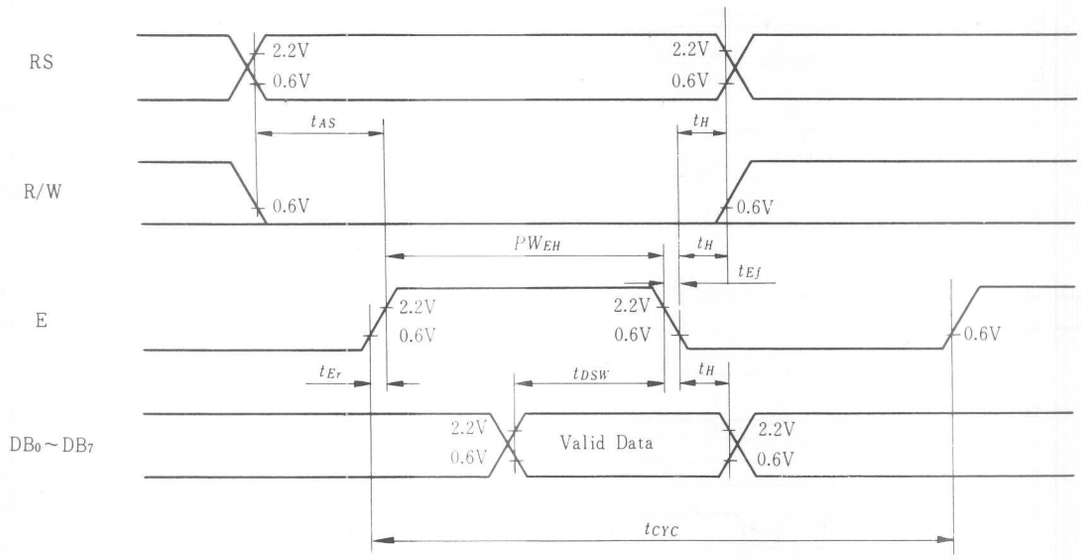

Fig. 5 Interface timing (data write)

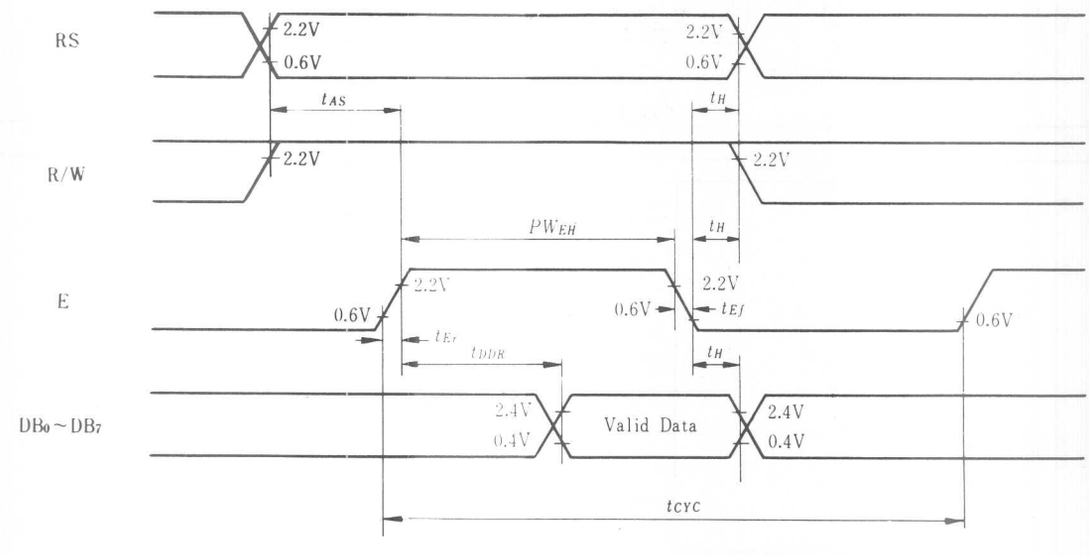

Fig. 6 Interface timing (data read)

GRAPHIC LCD MODULE

HD 61830 Graphic LCD Controller

- Display Controller and Character Generator for Liquid Crystal Dot Matrix Graphic Display Systems

The HD61830 receives the display data from a microcomputer and stores them in an external RAM. It converts these data into the serial display pattern, and transfers them to the LCD drivers.

Two kinds of display modes are available:

The Semi-Graphic mode and the Full-Graphic mode.

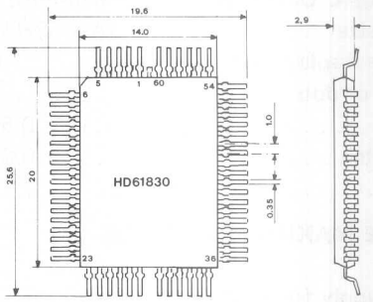

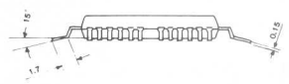

FEATURES

- Full-Graphic mode with 512,000 dots
- Semi-Graphic mode with 192 characters by the internal character generator ROM, plus 4,000 characters by an external ROM
- Display Duty of 1/128 min.
- Other functions controlled by the microcomputer
  Scroll
  Cursor ON/OFF/Blink
  Display Clear
- 60-pin flat plastic package
- Single 5V power supply
- TTL compatible inputs and outputs

BLOCK DIAGRAM

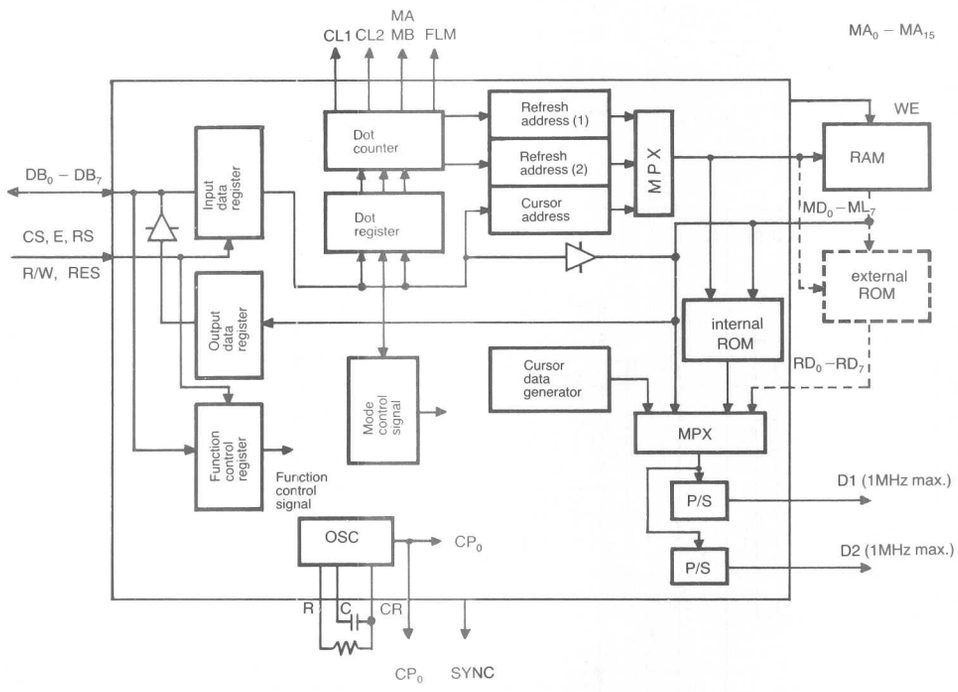

H2525

- 239dot (W) x 20 dot (H) graphic and alpha-numeric display
- Control LSI HD61830 attachment type

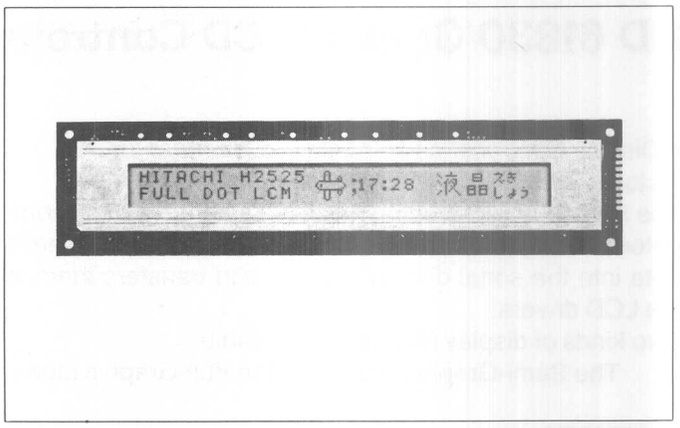

MECHANICAL DATA (Nominal dimensions)

Module size	220W x 53H x 15D (max) mm
Effective display area	163W x 17H mm
Number of dots	239W x 20H dot
Dot size	0.55W x 0.55H mm
Pitch	0.65W x 0.65H mm
Weight	about 100g

ABSOLUTE MAXIMUM RATINGS

	min.	max.
Power supply for logic ($V_{DD}-V_{SS}$)	0	7.0V
Power supply for LCD drive ($V_{DD}-V_{EE}$)	0	13.5V
Input voltage (V_i)	V_{SS}	V_{DD}V
Operating temperature (Ta)	0	50°C
Storage temperature (Tstg)	−20	60°C

ELECTRICAL CHARACTRISTICS

Ta=25°C, V_{DD}=5.0V±0.25V, V_{EE}=−5.0V±0.25V

Input "high" voltage (V_{iH})	0.7 x V_{DD}V min.
Input "low" voltage (V_{iL})	0.3 x V_{DD}V max.
Clock frequency (f_{CL2})	210 KHz min.
	300 KHz typ.
	390 KHz max.
Power supply current (I_{DD})	3mA typ.
(I_{EE})	1mA

D_1, D_2=GND, f_{CL2}=300 KHz

Power supply for LCD drive (Recommended) (V_O-V_{EE})
Du=1/20

at Ta= 0°C	5.5V typ.
at Ta=25°C	5.0V typ.
at Ta=50°C	4.0V typ.

OPTICAL DATA ..... See page 6

INTERNAL PIN CONNECTION

Pin No.	Symbol	Level	Function
1	FLM	H	The FLM single indicates the beginning of each display cycle.
2	M	H/L	Control signal for a.c. driving
3	CL1	H→L	The CL1 latches the serial data in the shift registers.
4	D1	H/L	Serial row data
5	CL2	H→L	Clock signal for shifting the serial data
6	V_{DD}(+5V)	—	Power supply for logic circuit
7	V_{SS}(GND)	—	Ground
8	V_{EE}(−5V)	—	Power supply for LC driving
9	V_O	—	Operating voltage for LC driving
10	NC	—	No connection

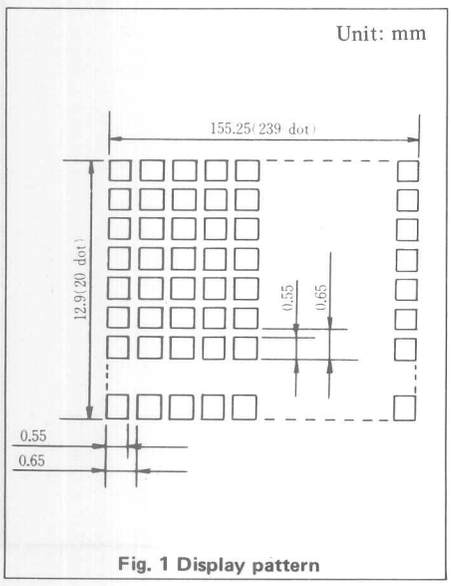

Fig. 1 Display pattern

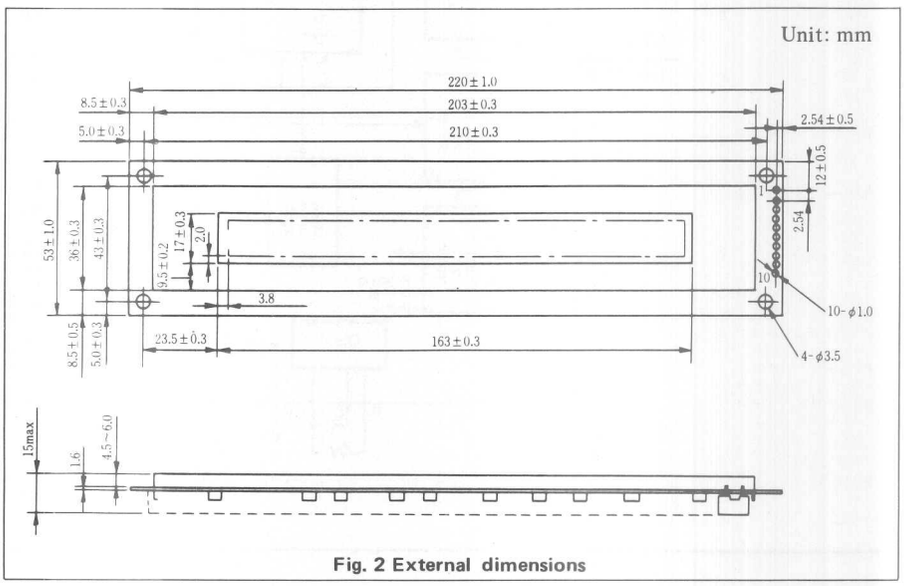

Fig. 2 External dimensions

HITACHI

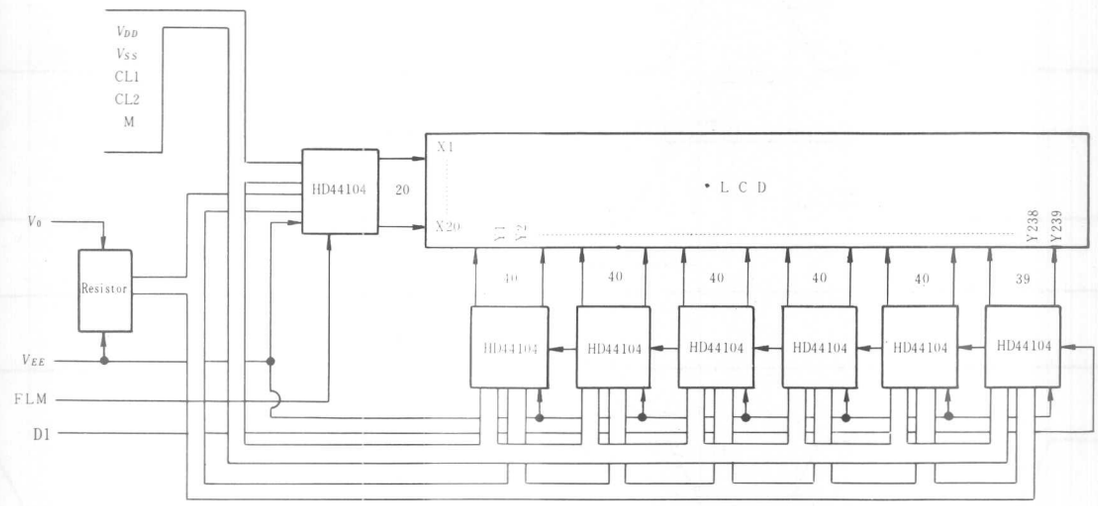

Fig. 3 Block diagram

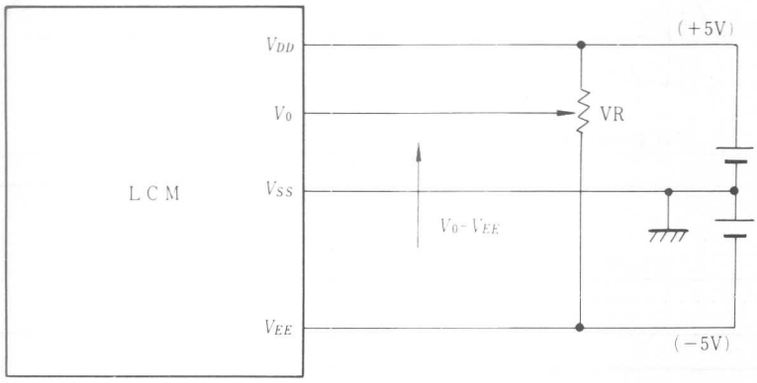

V_O-V_{EE}: LCD driving voltage
VR: 10kΩ~20kΩ

Fig. 4 Power supply

TIMING CHARACTERISTICS

Item	Symbol	min.	typ.	max.	Unit
Clock frequency	f_{CL2}	–	–	500	KHz(Note 1)
Clock pulse width (High level)	t_{CWH}	800	–	–	ns
Clock pulse width (Low level)	t_{CWL}	800	–	–	ns
Clock set up time	t_{CSU}	500	–	–	ns
Data set up time	t_{SU}	300	–	–	ns
FLM set up time	t_{FSU}	300	–	–	ns
M delay time	t_{DM}	−1000	0	+1000	ns (Note 2)
FLM hold time	t_{FH}	0	–	–	ns
Data hold time	t_{DH}	300	–	–	ns

Note 1. Optimum frequency for the highest contrast is different by the type of module.

Note 2. Timing of M signal to CLI may be in the range of ±1000ns.

Note 3. In adjusting FLM frequency, avoid setting it around the commercial frequency (50Hz±2Hz or 60Hz ±2Hz) to prevent LCD flicker.

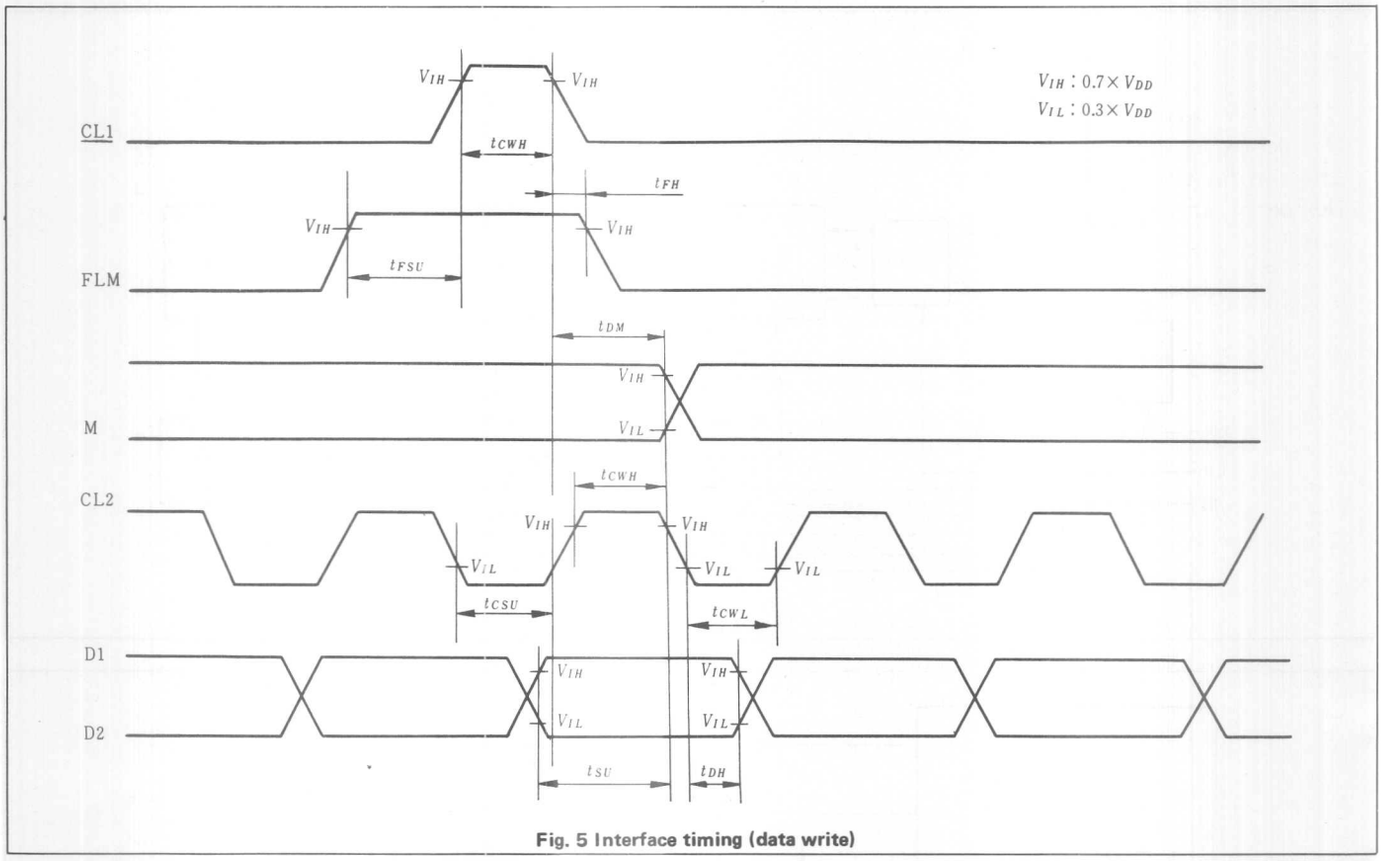

Fig. 5 Interface timing (data write)

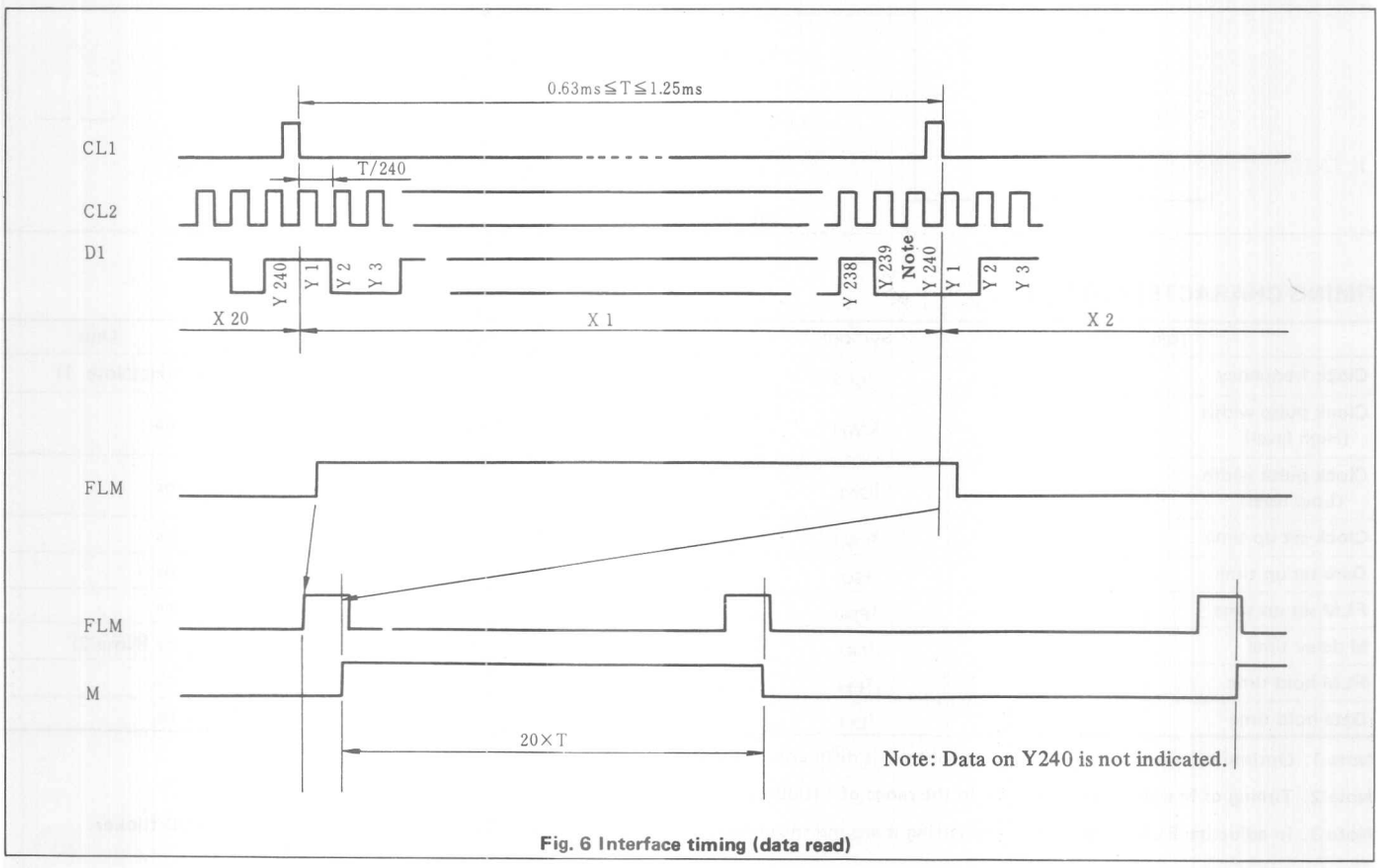

Fig. 6 Interface timing (data read)

LM200

- 240 dot (W) x 64 dot (H) graphic and alpha-numeric display
- Control LSI HD61830 attachment type

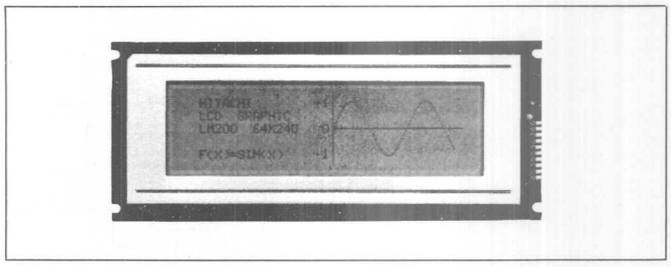

MECHANICAL DATA (Nominal dimensions)

Module size	180W x 75H x 15D (max) mm
Effective display area	132W x 39H mm
Number of dots	240W x 64H dot
Dot size	0.48W x 0.48H mm
Pitch	0.53W x 0.53H mm
Weight	about 150g

ABSOLUTE MAXIMUM RATINGS

	min.	max.
Power supply for logic ($V_{DD}-V_{SS}$)	0	7.0V
Power supply for LCD drive ($V_{DD}-V_{EE}$)	0	13.5V
Input voltage (V_i)	V_{SS}	V_{DD}V
Operating temperature (Ta)	0	50°C
Storage temperature (Tstg)	−20	60°C

ELECTRICAL CHARACTRISTICS

Ta=25°C, V_{DD}=5.0V±0.25V, V_{EE}=−5.0V±0.25V

Input "high" voltage (V_{iH})	0.7 x V_{DD}V min.
Input "low" voltage (V_{iL})	0.3 x V_{DD}Vmax.
Clock frequency (f_{CL2})	390 KHz min.
	460 KHz typ.
	520 KHz max.
Power supply current (I_{DD})	5mA typ.
(D_1, D_2=GND, f_{CL2}=460 KHz)	
Power supply for LCD drive (Recommended) (V_O-V_{EE})	
	Du=1/32
at Ta= 0°C	7.0V typ.
at Ta=25°C	6.5V typ.
at Ta=50°C	5.8V typ.

OPTICAL DATA ..... See Page 6

INTERNAL PIN CONNECTION

Pin No.	Symbol	Level	Function
1	D1	H/L	Serial row data
2	FLM	H	The FLM signal indicates the beginning of each display cycle.
3	M	H/L	Control signal for a.c. driving
4	CL1	H→L	The CL1 latches the serial data in the shift registers.
5	CL2	H→L	Clock signal for shifting the serial data
6	D2	H/L	Serial row data
7	V_{DD}(+5V)		Power supply for logic circuit
8	V_{SS}(GND)	–	Ground
9	V_{EE}(−5V)	–	Power supply for LC driving
10	V_O	–	Operating voltage for LC driving

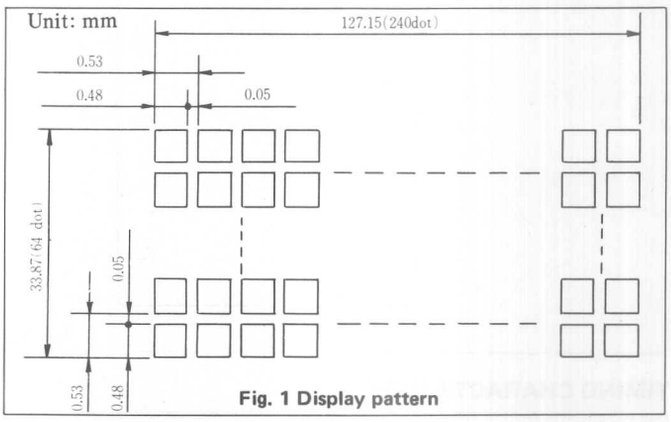

Fig. 1 Display pattern

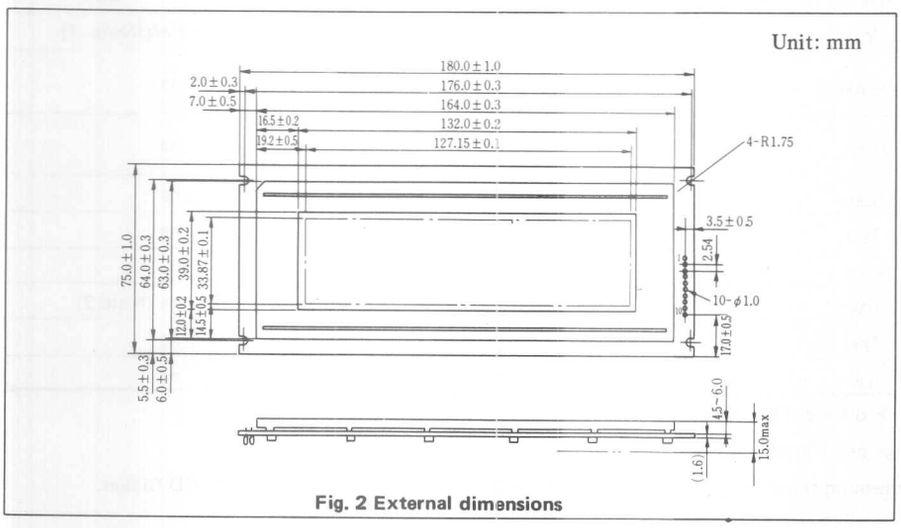

Fig. 2 External dimensions

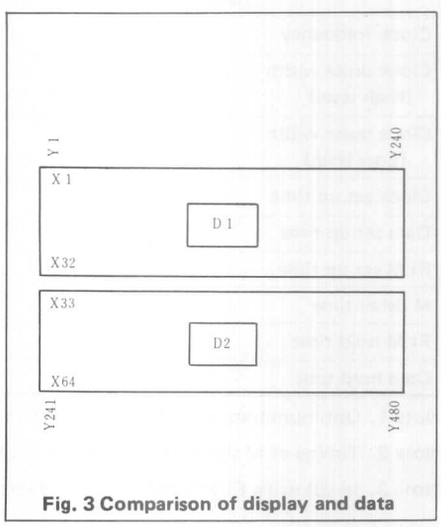

Fig. 3 Comparison of display and data

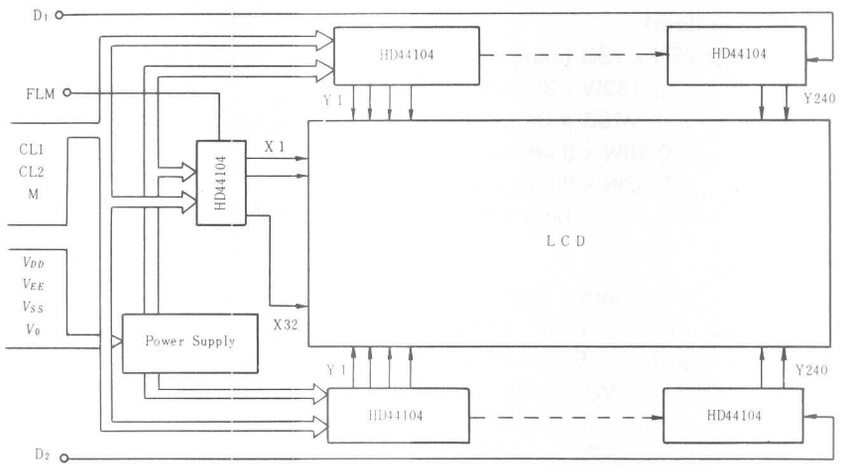

Fig. 4 Block diagram

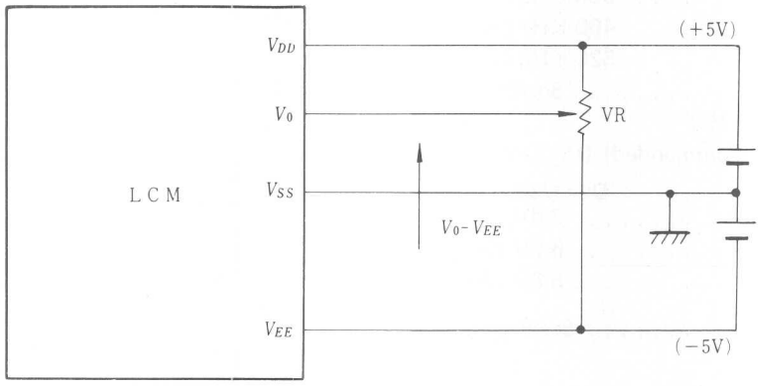

V_O-V_{EE}: LCD driving voltage
VR: 10kΩ~20kΩ

Fig. 5 Power supply

TIMING CHARACTERISTICS

Item	Symbol	min.	typ.	max.	Unit
Clock frequency	f_{CL2}	–	–	500	KHz(Note 1)
Clock pulse width (High level)	t_{CWH}	800	–	–	ns
Clock pulse width (Low level)	t_{CWL}	800	–	–	ns
Clock set up time	t_{CSU}	500	–	–	ns
Data set up time	t_{SU}	300	–	–	ns
FLM set up time	t_{FSU}	300	–	–	ns
M delay time	t_{DM}	−1000	0	+1000	ns (Note 2)
FLM hold time	t_{FH}	0	–	–	ns
Data hold time	t_{DH}	300	–	–	ns

Note 1. Optimum frequency for the highest contrast is different by the type of module.

Note 2. Timing of M signal to CLI may be in the range of ±1000ns.

Note 3. In adjusting FLM frequency, avoid setting it around the commercial frequency (50Hz±2Hz or 60Hz ±2Hz) to prevent LCD flicker.

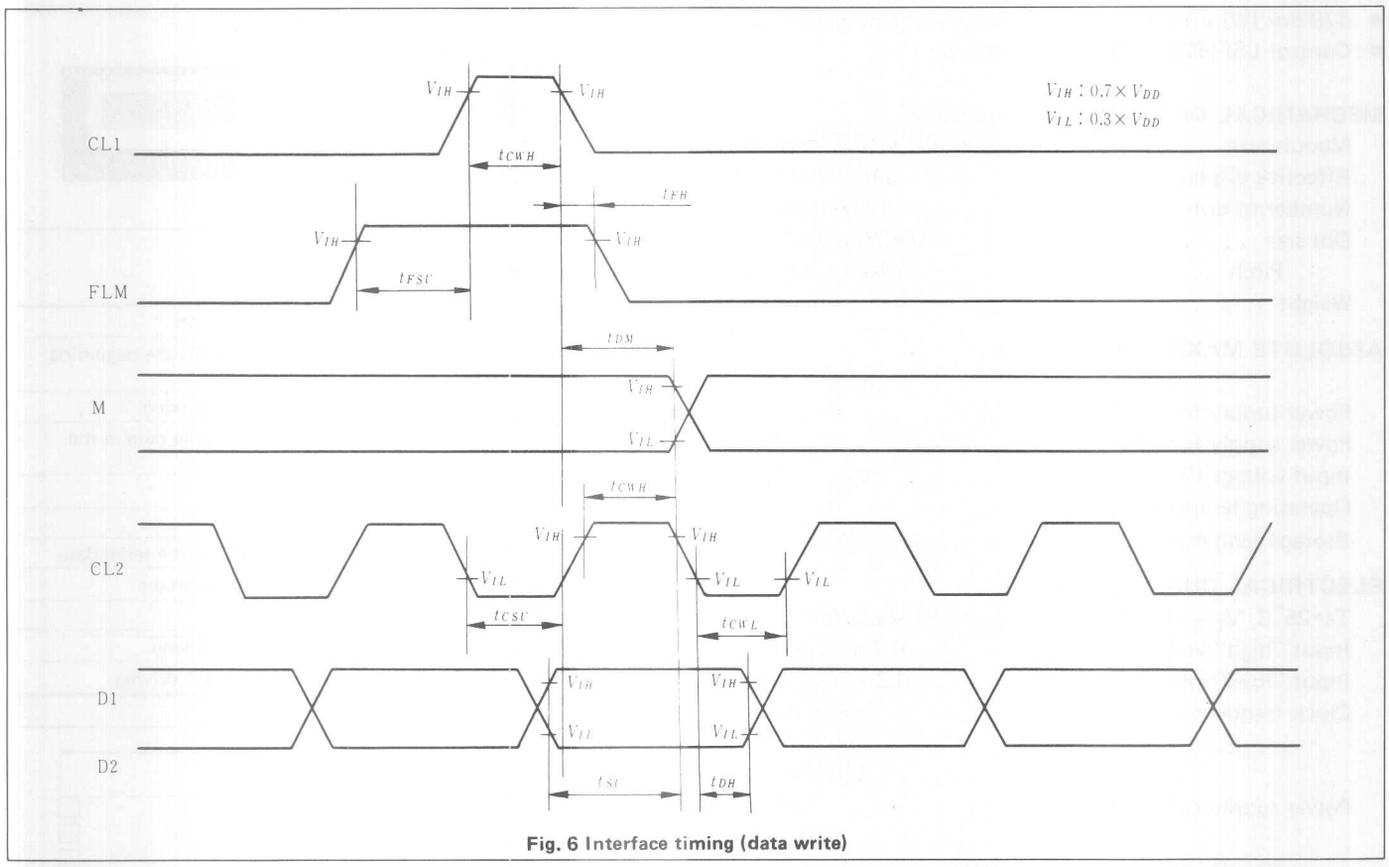

Fig. 6 Interface timing (data write)

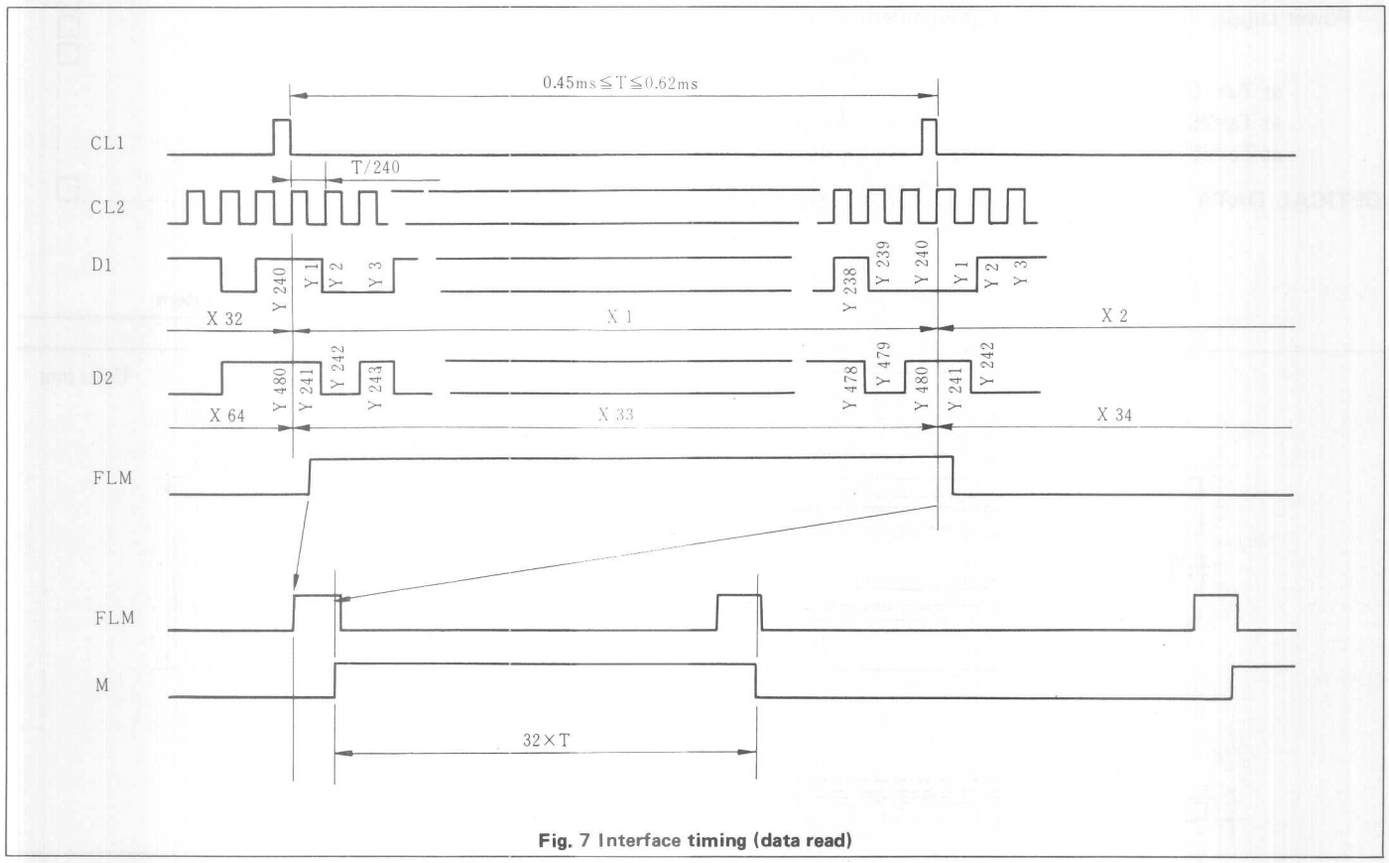

Fig. 7 Interface timing (data read)

LM021

- 479 dot (W) x 19 dot (H) graphic and alpha-numeric display
- Control LSI HD61830 attachment type

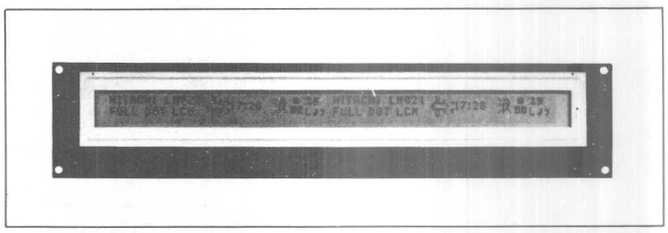

MECHANICAL DATA (Nominal dimensions)

Module size	290W x 60H x 13D (max) mm
Effective display area	245W x 19H mm
Number of dots	479W x 24H dot
Dot size	0.43W x 0.55H mm
Pitch	0.48W x 0.6H mm
Weight	about 150g

ABSOLUTE MAXIMUM RATINGS

	min.	max.
Power supply for logic ($V_{DD}-V_{SS}$)	0	7.0V
Power supply for LCD drive ($V_{DD}-V_{EE}$)	0	13.5V
Input voltage (V_i)	V_{SS}	V_{DD}V
Operating temperature (Ta)	0	50°C
Storage temperature (Tstg)	−20	60°C

ELECTRICAL CHARACTRISTICS

Ta=25°C, V_{DD}=5.0V±0.25V, V_{EE}=−5.0V±0.25V

Input "high" voltage (V_{iH})	0.7 x V_{DD}V min.
Input "low" voltage (V_{iL})	0.3 x V_{DD}V max.
Clock frequency (f_{CL2})	230 KHz min.
	350 KHz typ.
	460 KHz max.
Power supply current (I_{DD})	4mA typ.
(I_{EE})	2mA max.

(D_1, D_2=GND, f_{CL2}=350 KHz)

Power supply for LCD drive (Recommended) (V_O-V_{EE})

Duty = 1/24

at Ta= 0°C	6.0 V typ.
at Ta=25°C	5.4 V typ.
at Ta=50°C	4.4 V typ.

OPTICAL DATA ..... See page 6

INTERNAL PIN CONNECTION

Pin No.	Symbol	Level	Function
1	FLM	H	The FLM signal indicates the beginning of each display cycle.
2	M	H/L	Control signal for a.c. driving.
3	CL1	H→L	The CL1 latches the serial data in the shift registers.
4	D1	H/L	Serial row data
5	D2	H/L	Serial row data
6	CL2	H→L	Clock signal for shifting the serial data
7	V_{DD}(+5V)	–	Power supply for logic circuit
8	V_{SS}(GND)	–	Ground
9	V_{EE}(−5V)	–	Power supply for LC driving
10	V_O	–	Operating voltage for LC driving

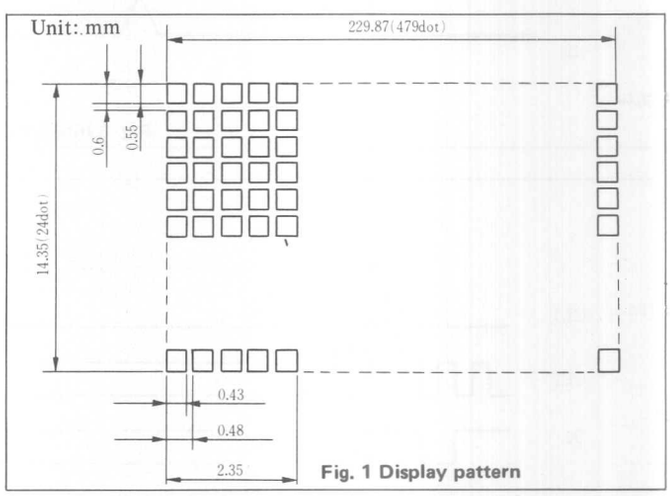

Fig. 1 Display pattern

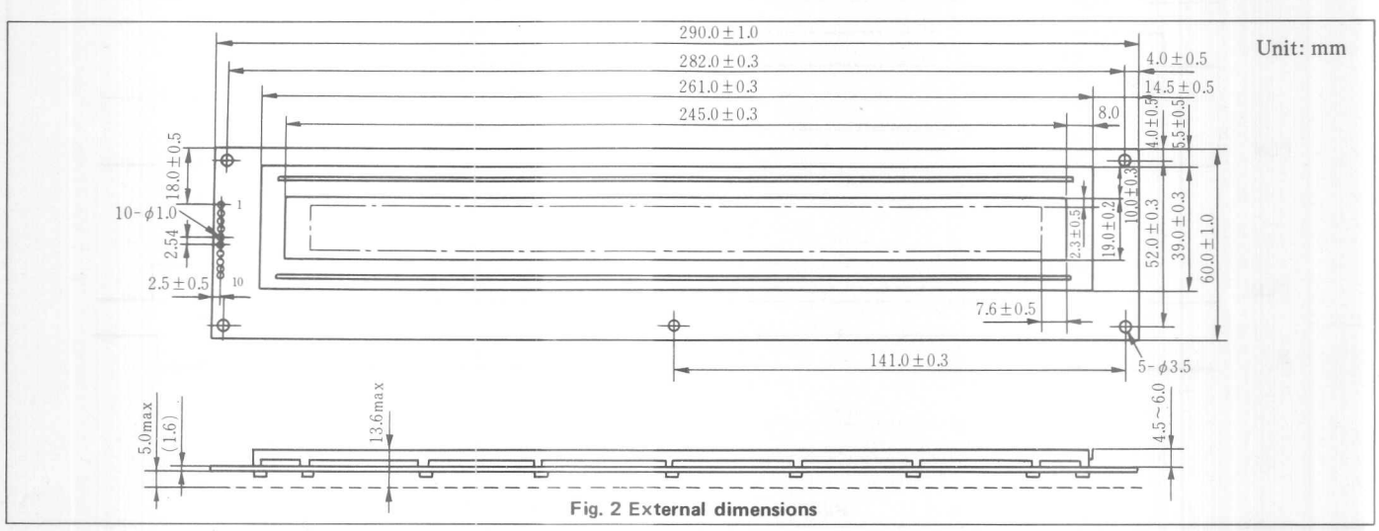

Fig. 2 External dimensions

HITACHI

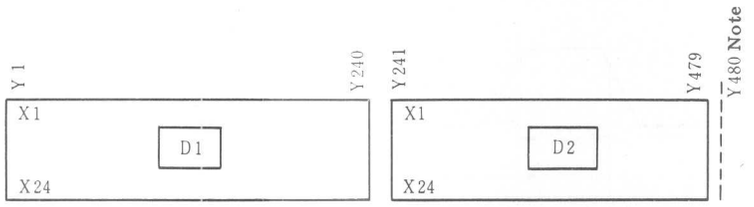

Fig. 3 Comparison of display and data Note: Y480 is a dummy line.

Note: IC1~IC14 : HD44100

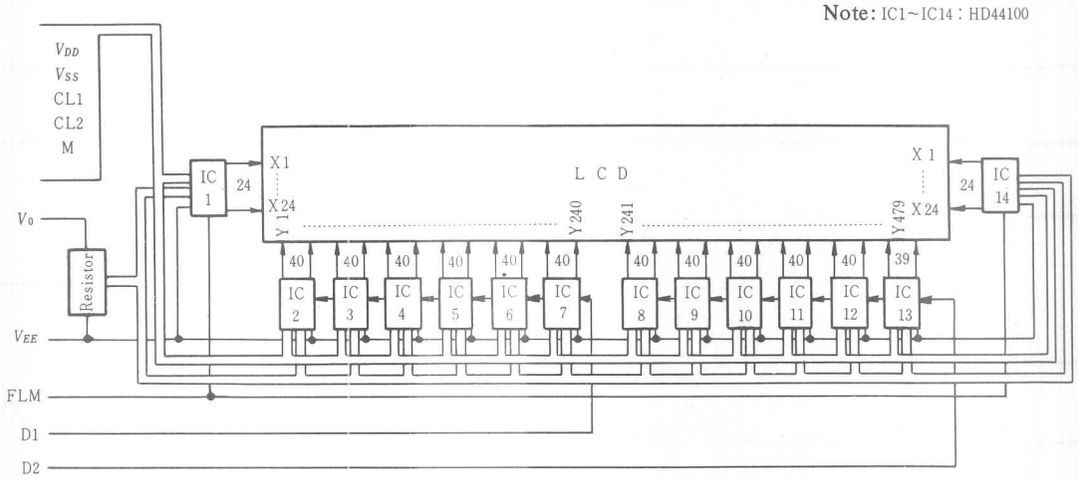

Fig. 4 Block diagram

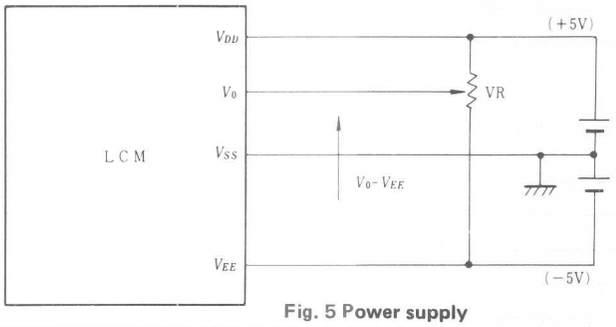

V_O-V_{EE}: LCD driving voltage
VR: 10kΩ~20kΩ

Fig. 5 Power supply

TIMING CHARACTERISTICS

Item	Symbol	min.	typ.	max.	Unit
Clock frequency	f_{CL2}	–	–	500	KHz(Note 1)
Clock pulse width (High level)	t_{CWH}	800	–	–	ns
Clock pulse width (Low level)	t_{CWL}	800	–	–	ns
Clock set up time	t_{CSU}	500	–	–	ns
Data set up time	t_{SU}	300	–	–	ns
FLM set up time	t_{FSU}	300	–	–	ns
M delay time	t_{DM}	−1000	0	+1000	ns (Note 2)
FLM hold time	t_{FH}	0	–	–	ns
Data hold time	t_{DH}	300	–	–	ns

Note 1. Optimum frequency for the highest contrast is different the type of module.

Note 2. Timing of M signal to CLI may be in the range of ±1000ns.

Note 3. In adjusting FLM frequency, avoid setting it around the commercial frequency (50Hz±2Hz or 60Hz ±2Hz) to prevent LCD flicker.

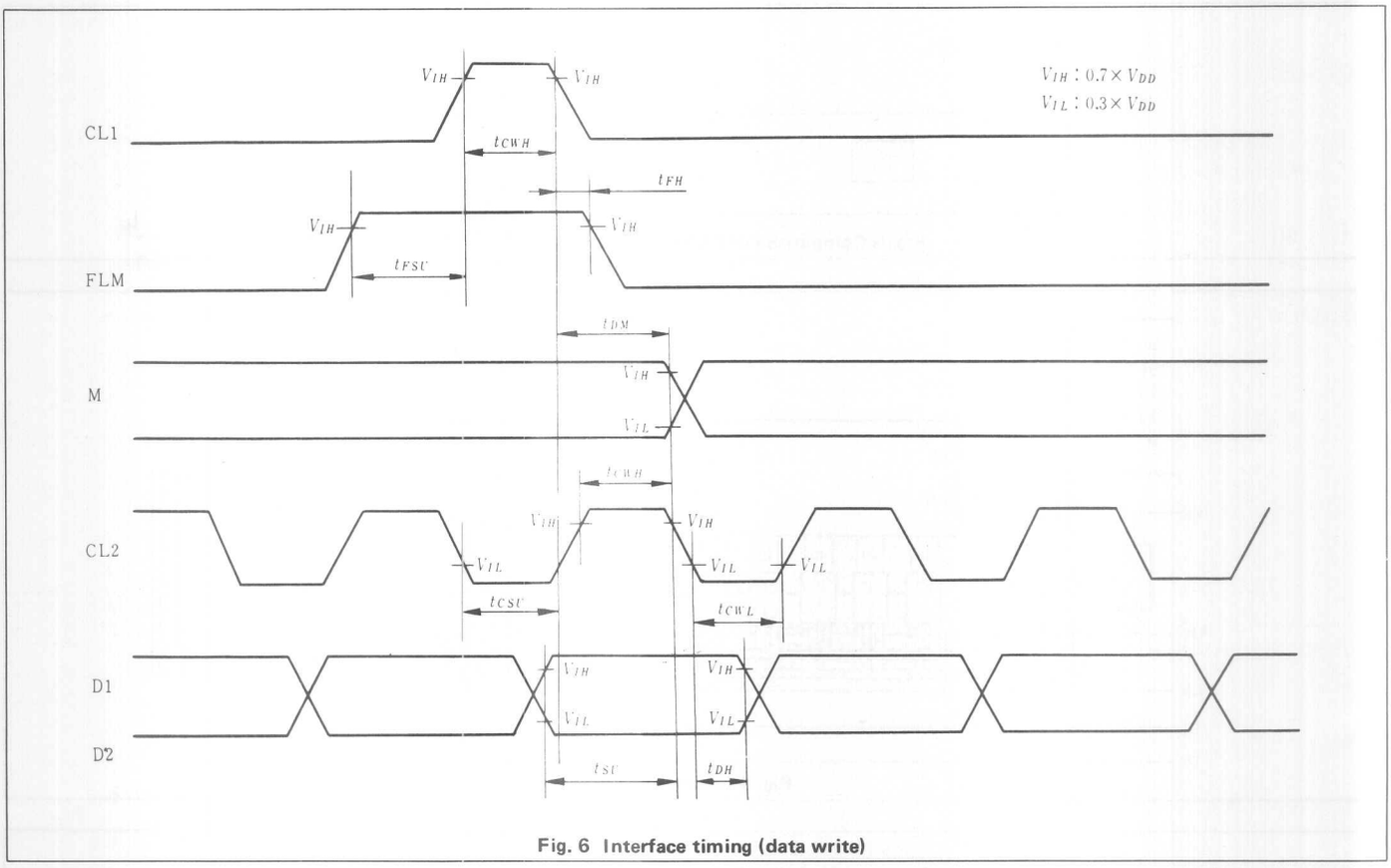

Fig. 6 Interface timing (data write)

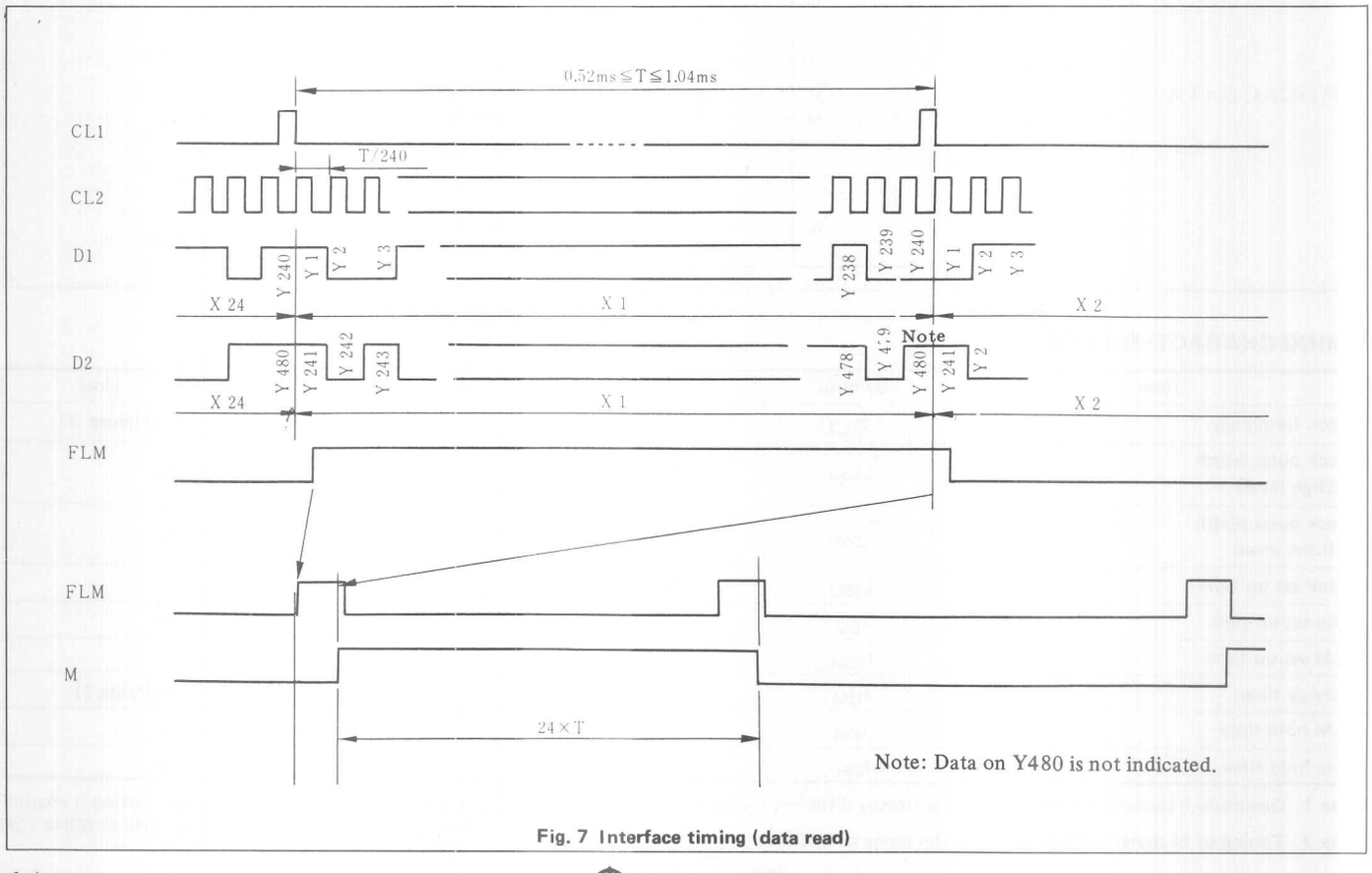

Fig. 7 Interface timing (data read)

LM054

- 8 position alpha-numeric display
- Built-in control LSI HD44780 type (see page 7)

MECHANICAL DATA (Nominal dimensions)

Module size ..... 84W x 44H x 15D (max.) mm
Effective display area ..... 61W x 15.8H mm
Character size (5 x 7 dots) ..... 6,7W x 9.4H mm
Pitch..... ..... 7.4 mm
Dot size ..... 1.3W x 1.3H mm
Weight ..... about 25 g

ABSOLUTE MAXIMUM RATINGS

	min.	max.
Power supply for logic ($V_{DD}-V_{SS}$)	0	7.0V
Power supply for LCD drive ($V_{DD}-V_O$)	0	13.5V
Input voltage (V_I)	V_{SS}	V_{DD}V
Operating temperature (T_A)	0	+50°C
Storage temperature (T_{STG})	−20	+70°C

ELECTRICAL CHARACTERISTICS

Ta = 25°C, V_{DD} = 5.0V ±0.25V
Input «high» voltage (V_{IH}) ..... 2.2V min.
Input «low» voltage (V_{IL}) ..... 0.6V max.
Output «high» voltage (V_{OH}) ($-I_{OH}$ = 0.2mA) .. 2.4V min.
Output «low» voltage (V_{OL}) (I_{OL} = 1.2mA) ..... 0.4V max.
Power supply current (I_{DD}) (V_{DD} = 5.0V) ..... 0.5mA typ.
3.0mA max.
Power supply for LCD drive (Recommended)
($V_{DD}-V_O$) DU = 1/8
at T_A = 0°C ..... 4.2V typ.
at T_A = 25°C ..... 3.8V typ.
at T_A = 50°C ..... 3.3V typ.

OPTICAL DATA ..... See page 6

Internal Pin Connection

Pin No.	Symbol	Level	Function	
1	V_{SS}	-	0V	Power Supply
2	V_{DD}	-	5V	
3	V_O	-	-	
4	RS	H/L	L: Instruction code output H: Data input	
5	R/W	H/L	H: Data read (LCD module−MPU) L: Data write (LCD module−MPU)	
6	E	H,H−L	Enable signal	
7	DBO	H/L	Data bus line Note 1, Note 2	
8	DB1	H/L		
9	DB2	H/L		
10	DB3	H/L		
11	DB4	H/L		
12	DB5	H/L		
13	DB6	H/L		
14	DB7	H/L		

Note:

In the HD44780, the data can be sent in either 4-bit 2-operation or 8-bit 1 operation so that it can interface to both 4 and 8 bit MPU's.

(1) When interface data is 4 bits long, data is transferred using only 4 buses of $DB_4 \approx DB_7$ and $DB_0 \approx DB_3$ are not used. Data transfer between the HD44780 and the MPU completes when 4-bit data is transferred twice. Data of the higher order 4 bits (contents of $DB_4 \approx DB_7$ when interface data is 8 bits long) is transferred first and then lower order 4 bits (contents of $DB_0 \approx DB_3$ when interface data is 8 bits long).

(2) When interface data is 8 bits long, data is transferred using 8 data buses of $DB_0 \approx DB_7$.

Unit: mm

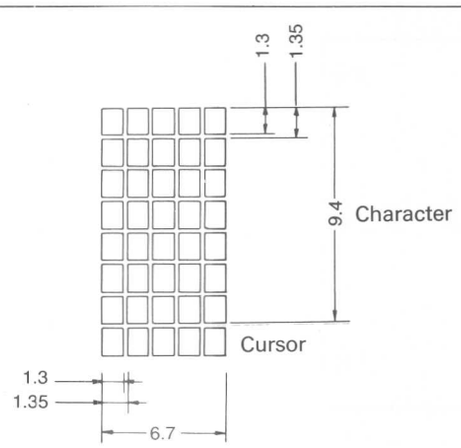

Fig. 1 Display pattern

Unit: mm

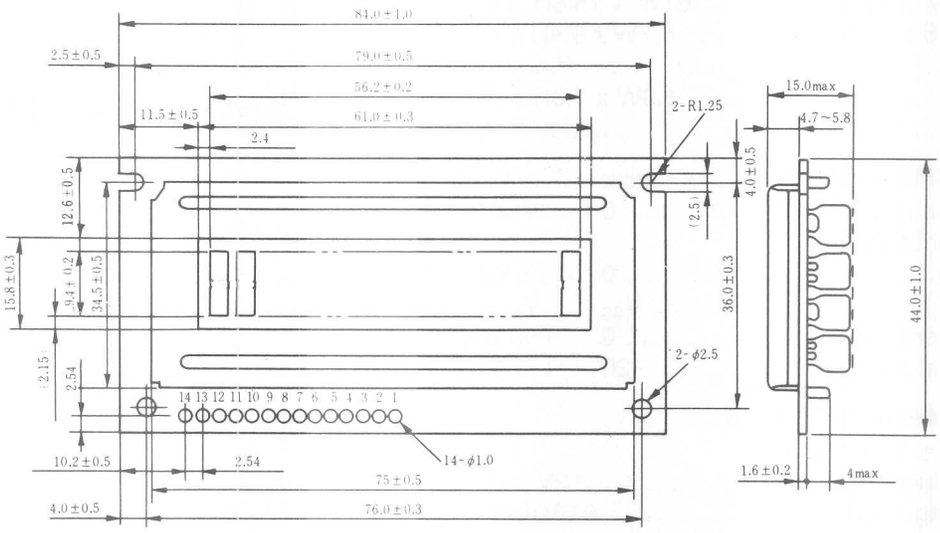

Fig. 2 External dimensions

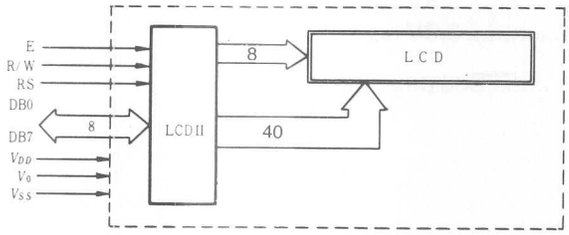

Fig. 3 Block diagram

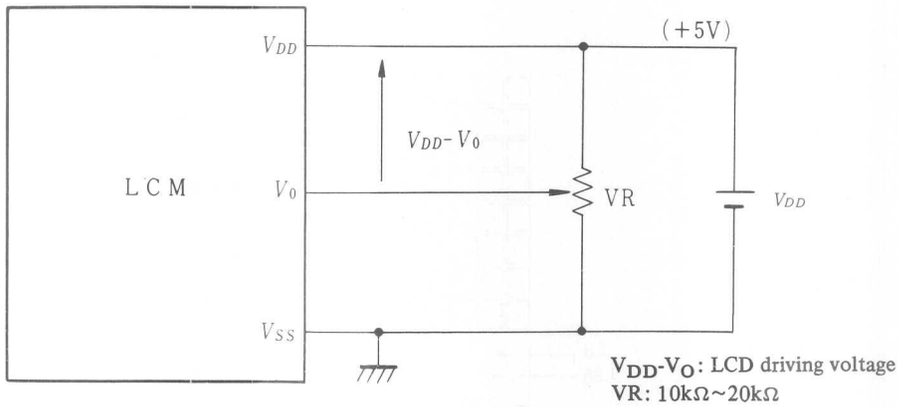

V_{DD}-V_O: LCD driving voltage
VR: 10kΩ~20kΩ

Fig. 4 Power supply

TIMING CHARACTERISTICS

Item	Symbol	Test condition	min.	typ.	max.	Unit
Enable cycle time	t_{cyc}	Fig. 5, Fig. 6	1.0	–	–	μs
Enable pulse width	P_{wEH}	Fig. 5, Fig. 6	450	–	–	ns
Enable rise/fall time	t_{Er}, t_{Ef}	Fig. 5, Fig. 6	–	–	25	ns
RS, R/W set up time	t_{AS}	Fig. 5, Fig. 6	140	–	–	ns
Data delay time	t_{DDR}	Fig. 6	–	–	320	ns
Data set up time	t_{DSW}	Fig. 5	225	–	–	ns
Hold time	t_H	Fig. 5, Fig. 6	10	–	–	ns

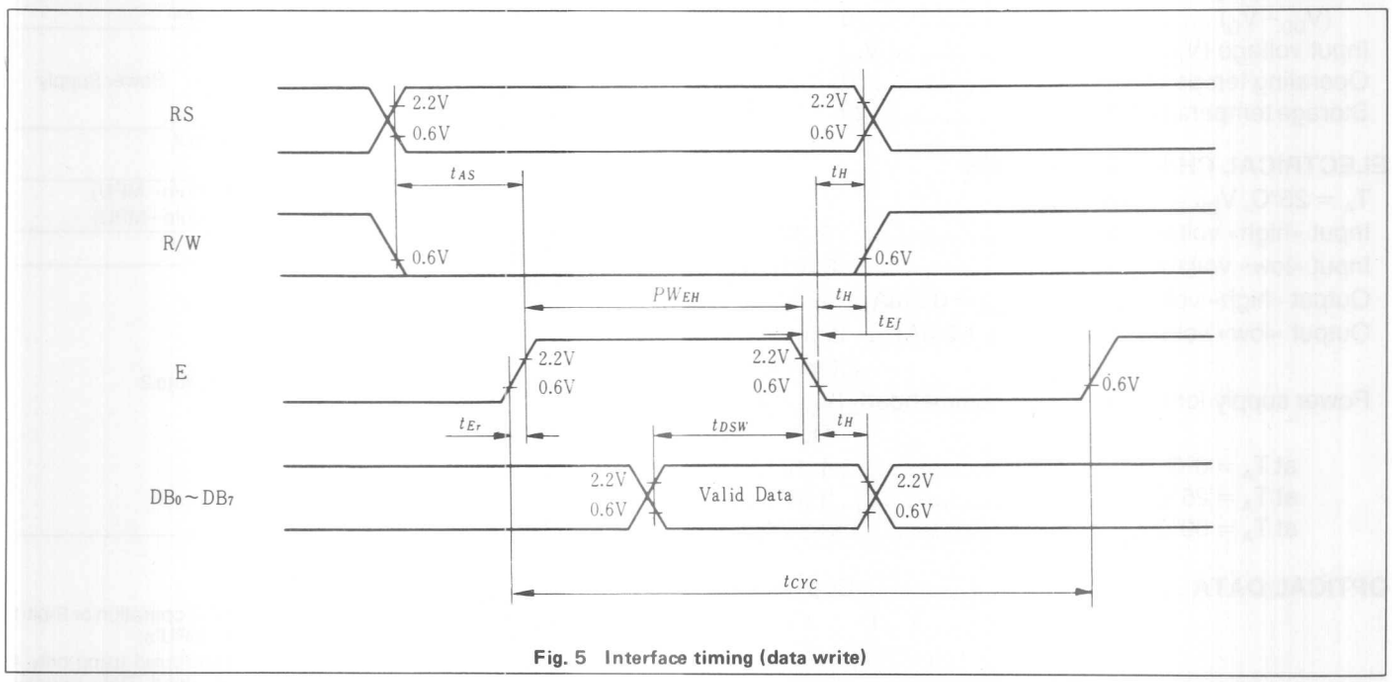

Fig. 5 Interface timing (data write)

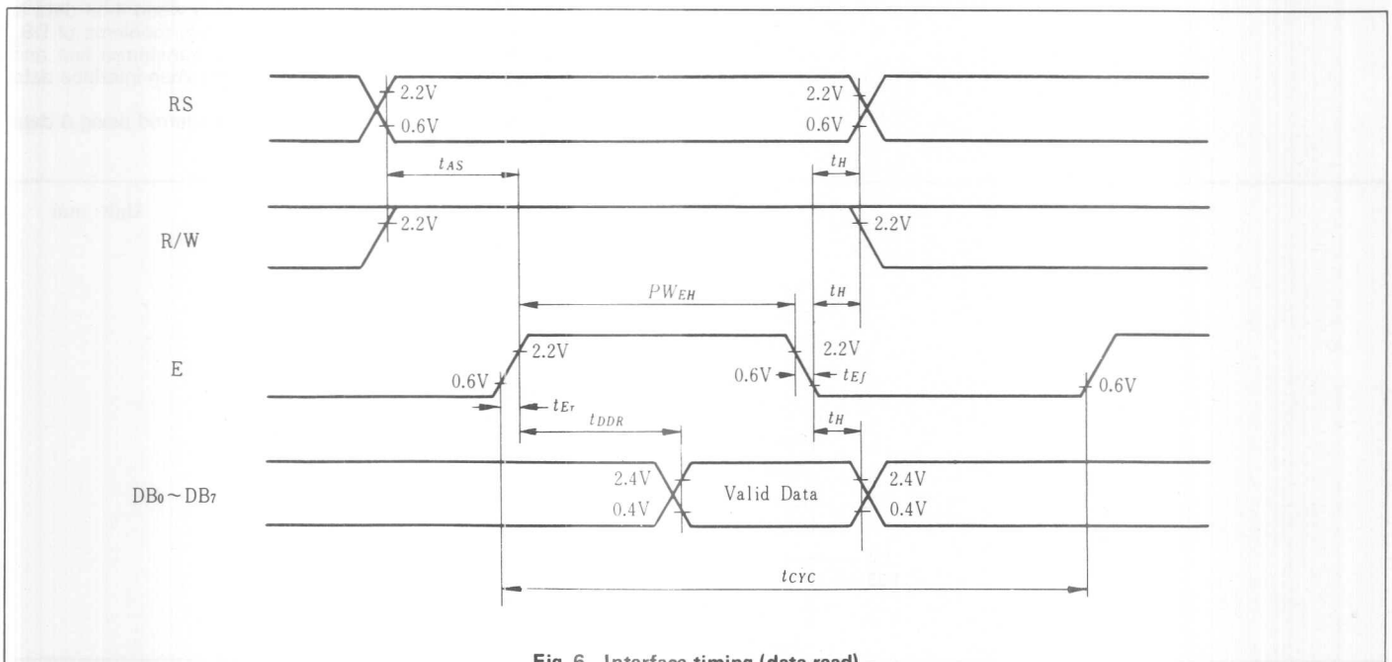

Fig. 6 Interface timing (data read)

LM038

- 20 position alpha-numeric display
- Built-in control LSI HD44780 type (see page 7)

MECHANICAL DATA (Nominal dimensions)

Module size ..... 182W x 33.5H x 13D (max.) mm
Effective display area ..... 154.4W x 15.8H mm
Character size (5 x 7 dots) ..... 6.7W x 9.4H mm
Pitch ..... 7.4 mm
Dot size ..... 1.3W x 1.3H mm
Weight ..... about 65 g

ABSOLUTE MAXIMUM RATINGS	min.	max.
Power supply for logic ($V_{DD}-V_{SS}$)	0	7.0V
Power supply for LCD drive ($V_{DD}-V_O$)	0	13.5V
Input voltage (V_{DD})	V_{SS}	V_{DD}V
Operating temperature (T_A)	0	50°C
Storage temperature (T_{STG})	-20	70°C

ELECTRICAL CHARACTERISTICS

$T_A = 25°C$, $V_{DD} = 5.0V \pm 0.25V$
Input «high» voltage (V_{IH}) ..... 2.2V min.
Input «low» voltage (V_{IL}) ..... 0.6V max.
Output «high» voltage (V_{OH}) ($-I_{OH} = 0.2mA$) ... 2.4V min.
Output «low» voltage (V_{OL}) ($I_{OL} = 1.2mA$) ..... 0.5mA typ.
2.0mA max.
Power supply for LCD drive (Recommended) ($V_{DD}-V_O$)
DU = 1/8
at $T_A = 0°C$ ..... 4.2V typ.
at $T_A = 25°C$ ..... 3.8V typ.
at $T_A = 50°C$ ..... 3.3V typ.

OPTICAL DATA ..... See page 6

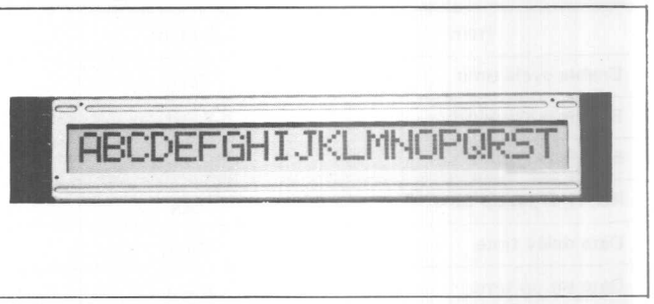

Internal Pin Connection

Pin No.	Symbol	Level	Function	
1	V_{SS}	-	0V	Power Supply
2	V_{DD}	-	5V	
3	V_O	-	-	
4	RS	H/L	L: Instruction code output H: Data input	
5	R/W	H/L	H: Data read (LCD module−MPU) L: Data write (LCD module−MPU)	
6	E	H,H−L	Enable signal	
7	DBO	H/L	Data bus line Note 1, Note 2	
8	DB1	H/L		
9	DB2	H/L		
10	DB3	H/L		
11	DB4	H/L		
12	DB5	H/L		
13	DB6	H/L		
14	DB7	H/L		

Note:

In the HD44780, the data can be sent in either 4-bit 2-operation or 8-bit 1 operation so that it can interface to both 4 and 8 bit MPU's.

(1) When interface data is 4 bits long, data is transferred using only 4 buses of $DB_4 \approx DB_7$ and $DB_0 \approx DB_3$ are not used. Data transfer between the HD44780 and the MPU completes when 4-bit data is transferred twice. Data of the higher order 4 bits (contents of $DB_4 \approx DB_7$ when interface data is 8 bits long) is transferred first and then lower order 4 bits (contents of $DB_0 \approx DB_3$ when interface data is 8 bits long).

(2) When interface data is 8 bits long, data is transferred using 8 data buses of $DB_0 \approx DB_7$.

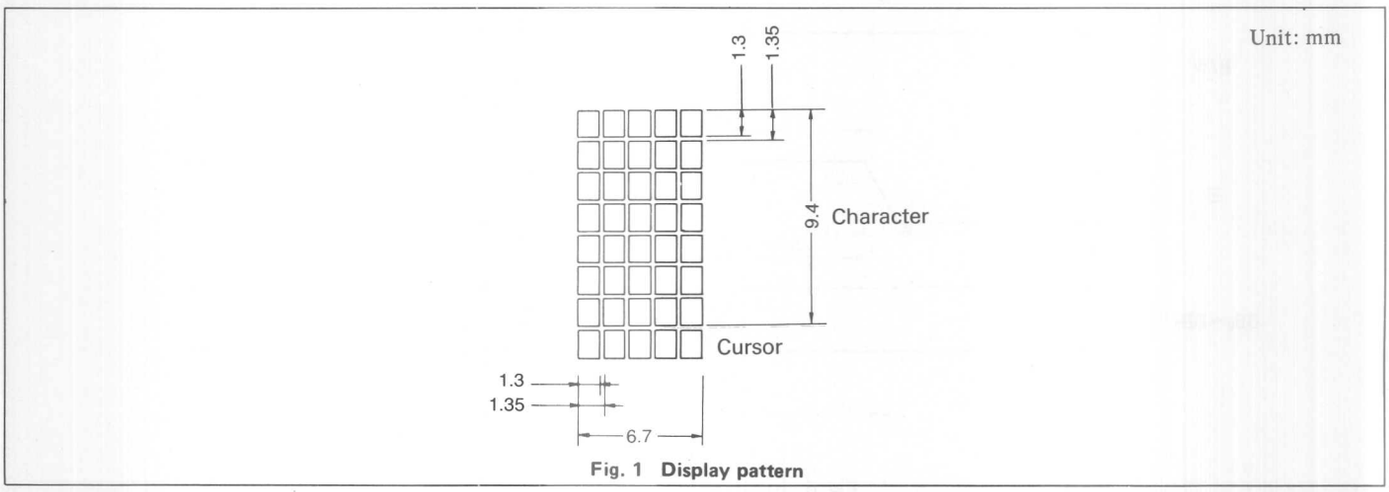

Fig. 1 **Display pattern**

HITACHI

Unit: mm

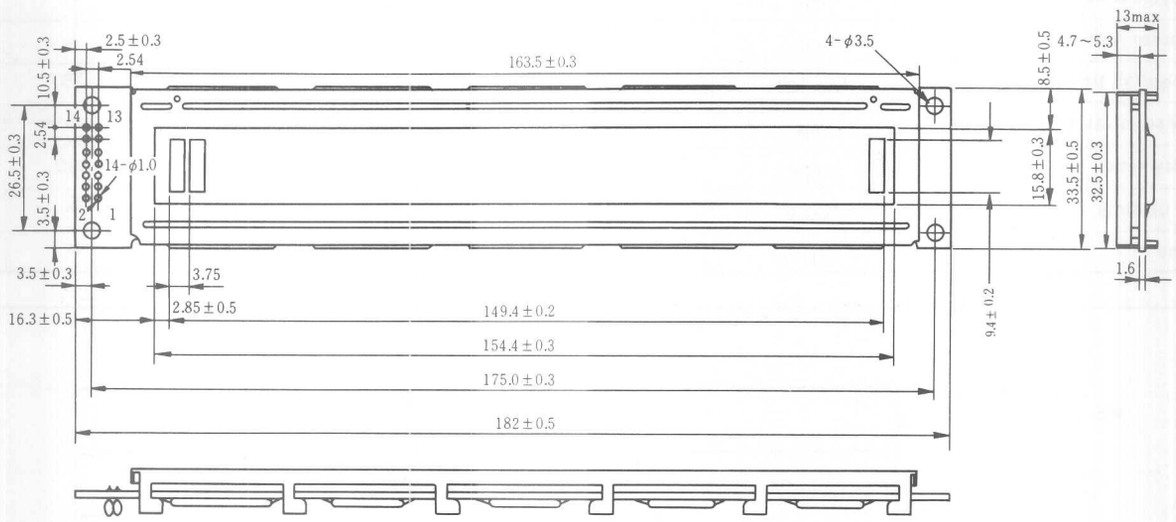

Fig. 2 External dimensions

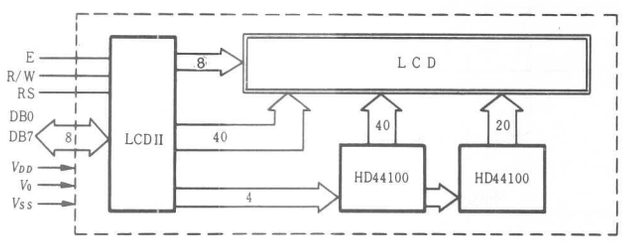

Fig. 3 Block diagram

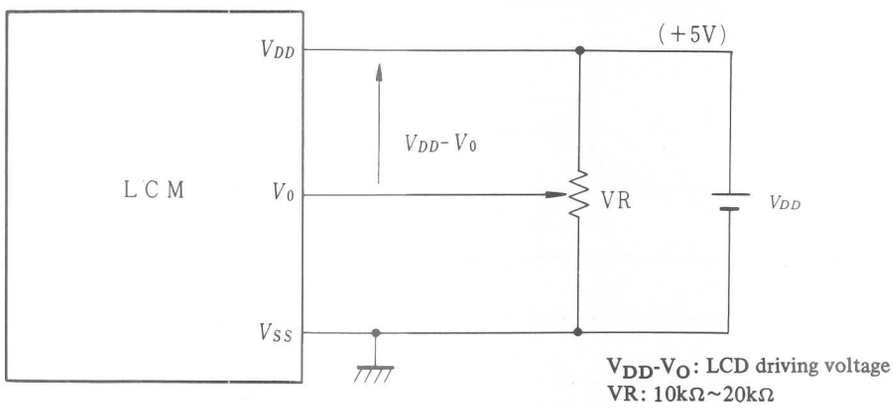

Fig. 4 Power supply

TIMING CHARACTERISTICS

Item	Symbol	Test condition	min.	typ.	max.	Unit
Enable cycle time	t_{cyc}	Fig. 5, Fig. 6	1.0	–	–	μs
Enable pulse width	P_{wEH}	Fig. 5, Fig. 6	450	–	–	ns
Enable rise/fall time	t_{Er}, t_{Ef}	Fig. 5, Fig. 6	–	–	25	ns
RS, R/W set up time	t_{AS}	Fig. 5, Fig. 6	140	–	–	ns
Data delay time	t_{DDR}	Fig. 6	–	–	320	ns
Data set up time	t_{DSW}	Fig. 5	225	–	–	ns
Hold time	t_H	Fig. 5, Fig. 6	10	–	–	ns

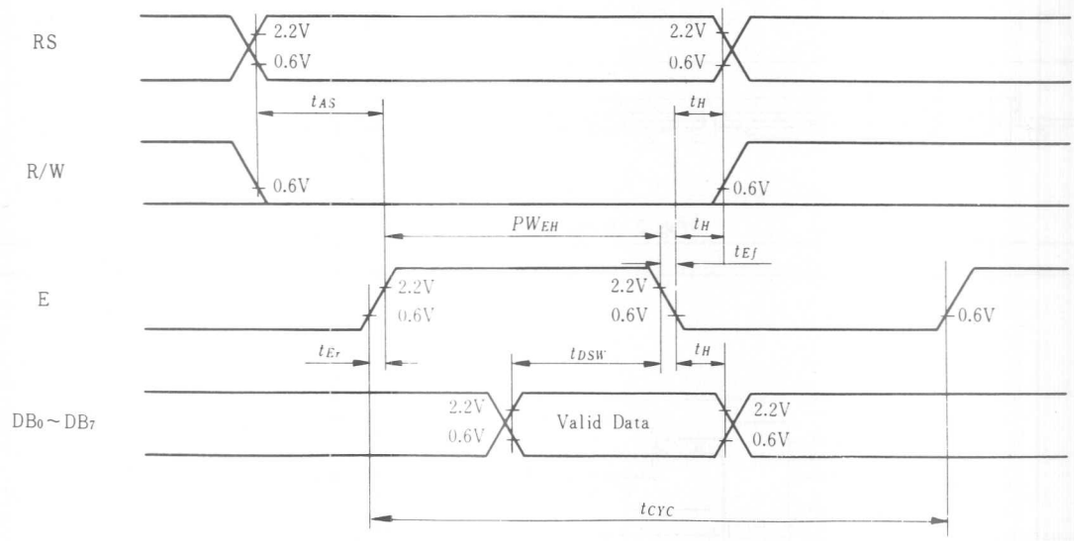

Fig. 5 Interface timing (data write)

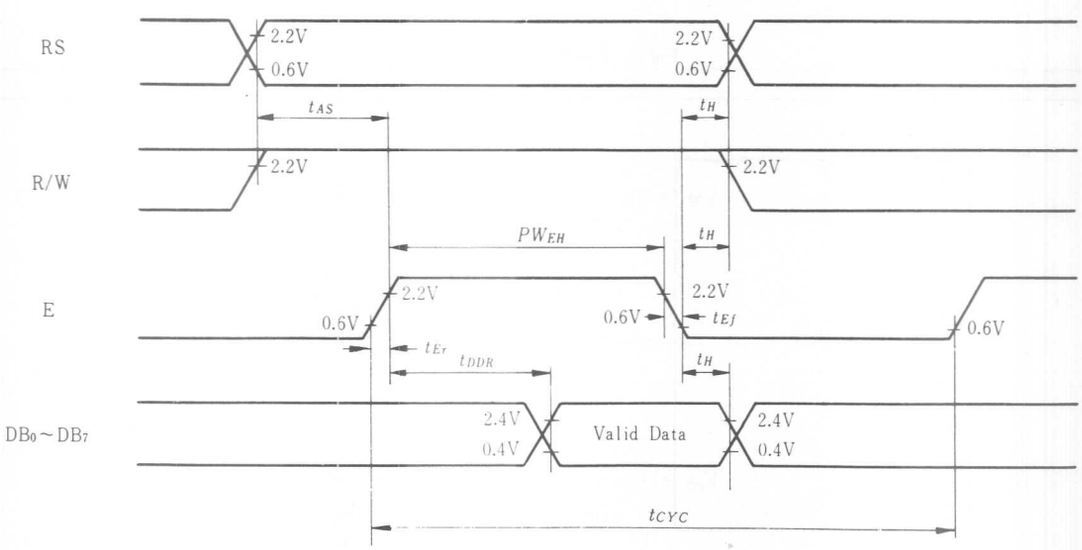

Fig. 6 Interface timing (data read)

7-Segment LCD's

for Industrial Applications

A detailed catalogue of these LCD's is available on request.
These standard LCD's for industrial applications are function- and pin-compatible with other brands commonly available.

TECHNICAL DATA

	Standard Temperature Range			Extended Temperature Range		
	Min.	Typ.	Max.	Min.	Typ.	Max.
Operating Temperature	-10°C	25°C	+60°C	-20°C	25°C	+80°C
Storage Temperature	-20°C	-	+60°C	-20°C	-	+80°C
Input Voltage	3.0V	5.0V	6.0V	4.5V	5.0V	6.0V
Static Electricity	-	-	100mV	-	-	200mV
Rise Time at 25°C	-	50ms	100ms	-	45ms	100ms
Fall Time at 25°C	-	110ms	250ms	-	50ms	100ms

LS021C-C

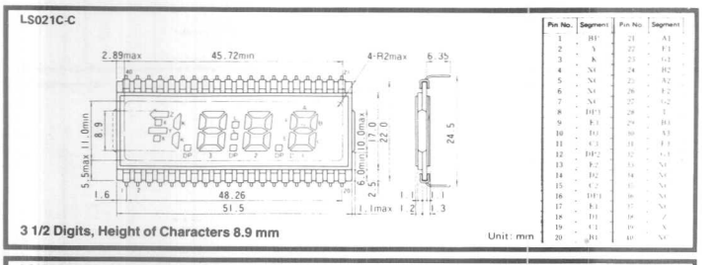

3 1/2 Digits, Height of Characters 8.9 mm

Unit: mm

H1331C-C

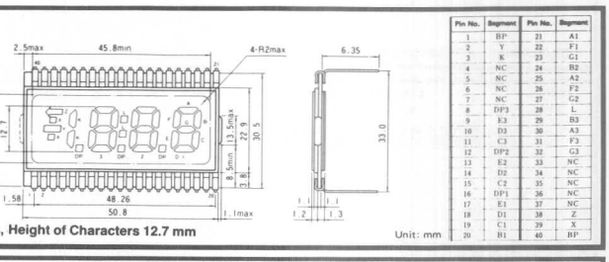

3 1/2 Digits, Height of Characters 12.7 mm

Unit: mm

LS022C-C

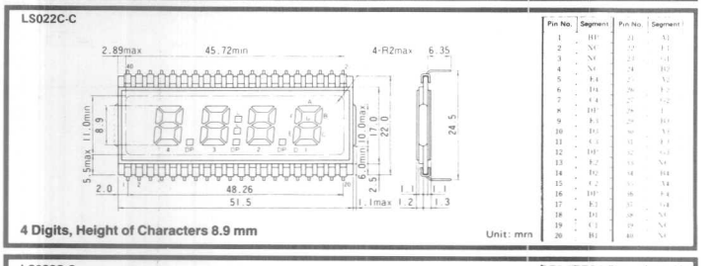

4 Digits, Height of Characters 8.9 mm

Unit: mm

H1332C-C

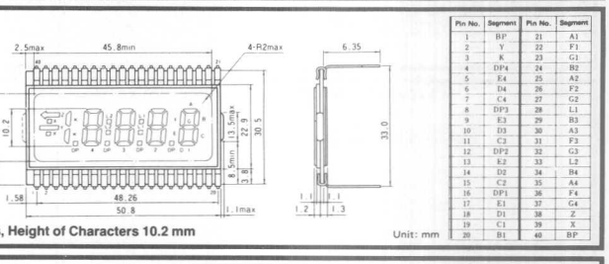

4 1/2 Digits, Height of Characters 10.2 mm

Unit: mm

LS023C-C

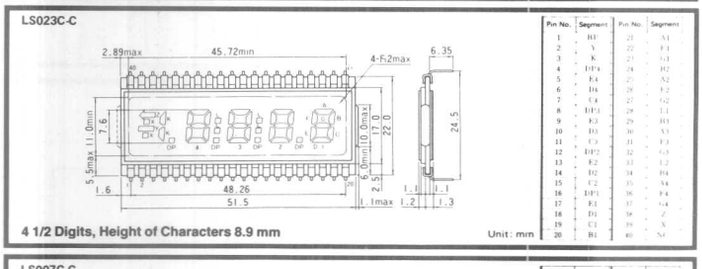

4 1/2 Digits, Height of Characters 8.9 mm

Unit: mm

H1333C-C

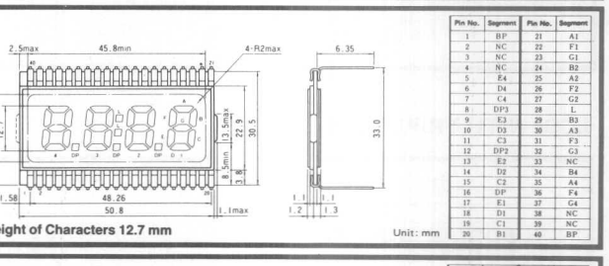

4 Digits, Height of Characters 12.7 mm

Unit: mm

LS007C-C

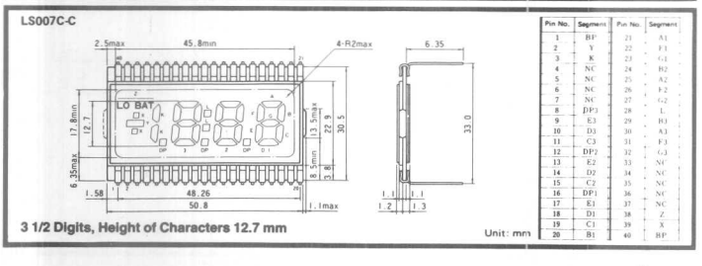

3 1/2 Digits, Height of Characters 12.7 mm

Unit: mm

LS024C-C

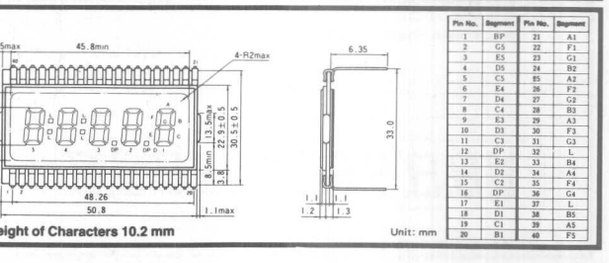

5 Digits, Height of Characters 10.2 mm

Unit: mm

H1335C-C

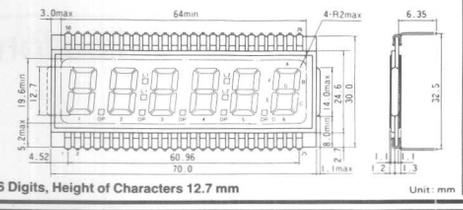

Pin No.	Segment	Pin No.	Segment	Pin No.	Segment
1	BP	21	DP5	41	G3
2	B1	22	E6	42	L1
3	D1	23	D6	43	B2
4	C3	24	C6	44	A2
5	DP3	25	B6	45	F2
6	F2	26	A6	46	G2
7	D2	27	F6	47	B1
8	C2	28	G6	48	A1
9	DP2	29	B5	49	F1
10	E3	30	A5	50	G1
11	D3	31	F5		
12	C3	32	G5		
13	DP3	33	L2		
14	E4	34	B4		
15	D4	35	A4		
16	C4	36	F4		
17	DP4	37	G4		
18	E5	38	B3		
19	D5	39	A3		
20	C5	40	F3		

6 Digits, Height of Characters 12.7 mm

Unit: mm

H1340-C-C

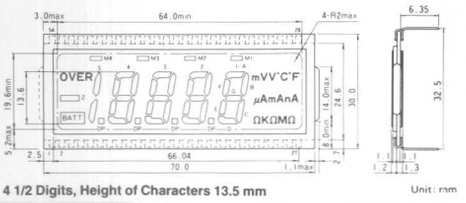

Pin No.	Segment	Pin No.	Segment	Pin No.	Segment
1	BP	21	K	41	E2
2	Z	22	M	42	B3
3	BATT	23	n	43	A3
4	BC	24	A	44	M3
5	DP4	25	C	45	F3
6	D4	26	F	46	G3
7	C4	27	BF	47	E3
8	DP3	28	V	48	B4
9	D3	29	mV	49	A4
10	C3	30	B1	50	M4
11	DP2	31	A1	51	F4
12	D2	32	M1	52	G4
13	C2	33	F1	53	E4
14		34	G1	54	OVER
15	DP1	35	E1		
16	D1	36	B2		
17	C1	37	A2		
18	A	38	M2		
19	mA	39	F2		
20	C	40	G2		

4 1/2 Digits, Height of Characters 13.5 mm

Unit: mm

H1336C-C

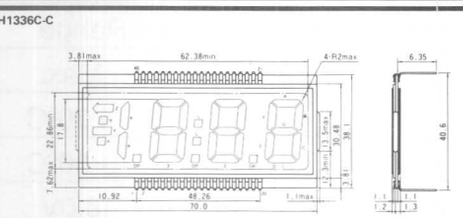

Pin No.	Segment	Pin No.	Segment
1	BP	21	A1
2	Y	22	F1
3	K	23	G1
4	NC	24	B2
5	NC	25	A2
6	NC	26	F2
7	NC	27	G2
8	DP3	28	L
9	E3	29	B3
10	D3	30	A3
11	C3	31	F3
12	DP2	32	G3
13	E2	33	NC
14	D2	34	NC
15	C2	35	NC
16	DP1	36	NC
17	E1	37	NC
18	D1	38	Z
19	C1	39	X
20	B1	40	BP

3 1/2 Digits, Height of Characters 17.8 mm

Unit: mm

H1337C-C

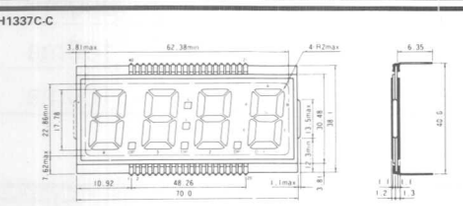

Pin No.	Segment	Pin No.	Segment
1	BP	21	A1
2	NC	22	F1
3	NC	23	G1
4	NC	24	B2
5	E4	25	A2
6	D4	26	F2
7	C4	27	G2
8	DP3	28	L
9	E3	29	B3
10	D3	30	A3
11	C3	31	F3
12	DP2	32	G3
13	E2	33	NC
14	D2	34	B4
15	C2	35	A4
16	DP1	36	F4
17	E1	37	G4
18	D1	38	NC
19	C1	39	NC
20	B1	40	BP

4 Digits, Height of Characters 17.8 mm

Unit: mm

LS028C-C

4 Digits, Height of Characters 25.4 mm

Unit: mm

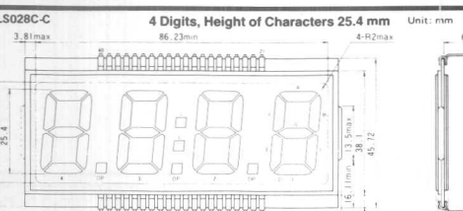

Pin No.	Segment	Pin No.	Segment
1	BP	21	A1
2	NC	22	F1
3	NC	23	G1
4	NC	24	B2
5	E4	25	A2
6	D4	26	F2
7	C4	27	G2
8	DP3	28	L
9	E3	29	B3
10	D3	30	A3
11	C3	31	F3
12	DP2	32	G3
13	E2	33	NC
14	D2	34	B4
15	C2	35	A4
16	DP1	36	F4
17	E1	37	G4
18	D1	38	NC
19	C1	39	NC
20	B1	40	NC

H1339C-C

4 1/2 Digits, Height of Characters 20.3 mm

Unit: mm

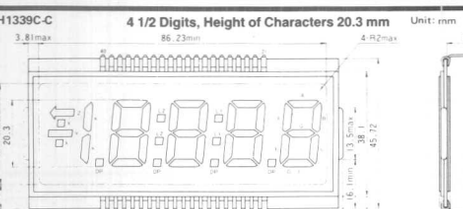

Pin No.	Segment	Pin No.	Segment
1	BP	21	A1
2	Y	22	F1
3	K	23	G1
4	DP4	24	B2
5	E4	25	A2
6	D4	26	F2
7	C4	27	G2
8	DP3	28	L1
9	E3	29	B3
10	D3	30	A3
11	C3	31	F3
12	DP2	32	G3
13	E2	33	NC
14	D2	34	B4
15	C2	35	A4
16	DP1	36	F4
17	E1	37	G4
18	D1	38	NC
19	C1	39	NC
20	B1	40	BP

LS025C-C

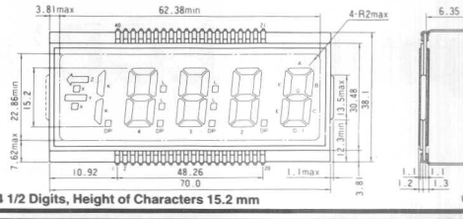

Pin No.	Segment	Pin No.	Segment
1	BP	21	A1
2	Y	22	F1
3	K	23	G1
4	DP	24	B2
5	E4	25	A2
6	D4	26	F2
7	C4	27	G2
8	DP	28	L1
9	E3	29	B3
10	D3	30	A3
11	C3	31	F3
12	DP	32	G3
13	E2	33	B1
14	D2	34	A4
15	C2	35	A1
16	DP	36	F4
17	E1	37	G4
18	D1	38	Z
19	C1	39	X
20	B1	40	NC

4 1/2 Digits, Height of Characters 15.2 mm

Unit: mm

LS026C-C

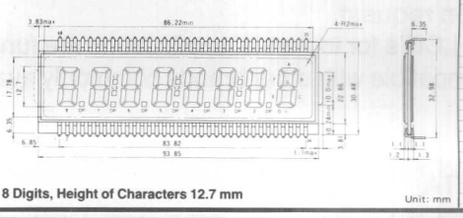

Pin No.	Segment	Pin No.	Segment	Pin No.	Segment
1	BP	21	C4	41	G2
2	E8	22	DP	42	L1
3	D8	23	E3	43	B3
4	C8	24	D3	44	A3
5	DP	25	C3	45	F3
6	E7	26	DP	46	G3
7	D7	27	E2	47	B4
8	C7	28	D2	48	A4
9	DP	29	C2	49	F4
10	BP	30	DP	50	G4
11	E6	31	E1	51	L2
12	D6	32	D1	52	B5
13	C6	33	C1	53	A5
14	DP	34	B1	54	F5
15	E5	35	A1	55	G5
16	D5	36	F1	56	B6
17	C5	37	G1	57	A6
18	DP	38	B2	58	F6
19	E4	39	A2	59	G6
20	D4	40	F2	60	L3

8 Digits, Height of Characters 12.7 mm

Unit: mm

LS027C-C

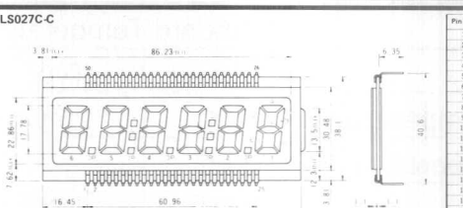

Pin No.	Segment	Pin No.	Segment	Pin No.	Segment
1	BP	21	DP	41	G4
2	E6	22	E1	42	L
3	D6	23	D1	43	B5
4	C6	24	C1	44	A5
5	DP	25	B1	45	F5
6	E5	26	A1	46	G5
7	D5	27	F1	47	B6
8	C5	28	G1	48	A6
9	DP	29	B2	49	F6
10	E4	30	A2	50	G6
11	D4	31	F2		
12	C4	32	G2		
13	DP	33	L		
14	E3	34	B3		
15	D3	35	A3		
16	C3	36	F3		
17	DP	37	G3		
18	E2	38	B4		
19	D2	39	A4		
20	C2	40	F4		

6 Digits, Height of Characters 17.8 mm

Unit: mm

H1338C-C

3 1/2 Digits, Height of Characters 25.4 mm

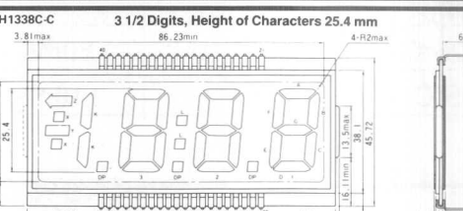

Pin No.	Segment	Pin No.	Segment
1	BP	21	A1
2	Y	22	F1
3	K	23	G1
4	NC	24	B2
5	NC	25	A2
6	NC	26	F2
7	NC	27	G2
8	DP3	28	L
9	E3	29	B3
10	D3	30	A3
11	C3	31	F3
12	DP2	32	G3
13	E2	33	NC
14	D2	34	NC
15	C2	35	NC
16	DP1	36	NC
17	E1	37	NC
18	D1	38	Z
19	C1	39	X
20	B1	40	BP

Unit: mm

LS029C-C

10 Digits, Height of Characters 12 mm

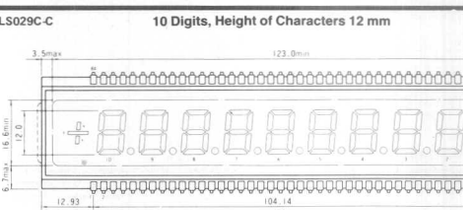

Unit: mm

Pin No.	Segment	Pin No.	Segment	Pin No.	Segment	Pin No.	Segment	Pin No.	Segment
1	X	21	C6	41	C1	61	B5	81	B10
2	Y	22	DP6	42	DP1	62	A5	82	A10
3	E10	23	E5	43	B1*	63	F5	83	F10
4	D10	24	D5	44	NC	64	G5	84	G10
5	C10	25	C5	45	B1	65	H6		
6	DP10	26	DP5	46	A1	66	A6		
7	E9	27	E4	47	F1	67	F6		
8	D9	28	D4	48	G1	68	G6		
9	C9	29	C4	49	H2	69	H7		
10	DP9	30	DP4	50	A2	70	A7		
11	E8	31	E3	51	F2	71	F7		
12	D8	32	D3	52	G2	72	G7		
13	C8	33	C3	53	H3	73	H8		
14	DP8	34	DP3	54	A3	74	A8		
15	E7	35	E2	55	F3	75	F8		
16	D7	36	D2	56	G3	76	G8		
17	C7	37	C2	57	H4	77	H9		
18	DP7	38	DP2	58	A4	78	A9		
19	E6	39	E1	59	F4	79	F9		
20	D6	40	D1	60	G4	80	G9		

LCDs WITH TRIPLEX DRIVE

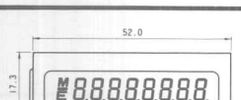

H 1258C, 8 Digits, Height of Characters 6 mm

H 2674, 10 Digits, Height of Characters 6 mm

H 2739, 10 Digits, Height of Characters 12 mm

Pinout for H 1258C H2674AND H 2739 on request.

HD61602/3 – CMOS LCD DRIVER

FEATURES

- Two operation modes: Static drive only or static and dynamic drive
- Two supply voltage modes: 3V or 5V
- Low current consumption
  30μA typ. for 3V operation
  50μA typ. for 5V operation
- Built-in power supply for LCD driver
- 8 bit data interface
- 51 segment outputs (64 segment outputs max.)

BLOCK DIAGRAM

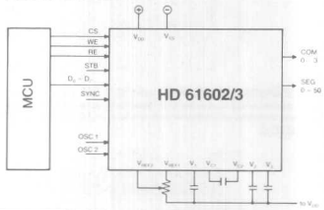

Segment outputs			HD61602	HD61603
			static and dynamic	static only
			51	64
D	Static		51	--
A	1/2 Bias	1/2 Duty	102	--
T	1/3 Bias	1/3 Duty	153	--
A	1/3 Bias	1/3 Duty	204	--

80 Pin Flat Pack

HD6301/03

8-Bit CMOS MPU

HD6301

- 8-Bit CMOS Microcomputer System for LCD Module Application.
- Single-Chip Version

The HD6301V0 is an 8-bit CMOS single-chip microcomputer unit, Object Code compatible with the HD6801. 4kB ROM, 128 bytes RAM, Serial Communication Interface (SCI), parallel I/O terminals as well as three functions of timer on chip are incorporated in the HD6301V0. It is bus compatible with HMCS6800, provided with some additional functions such as an improved execution time of key instruction plus several new instructions of operation to increase system throughput. The HD6301V0 can be expanded up to 65k words. Like the HMCS6800 family, I/O level is TTL compatible with +5.0V single power supply. By using the Hitachi's 3μm CMOS process, low power consumption is realized. And as lower power dissipation mode, HD6301V0 has Sleep Mode and Stand-By Mode. So flexible low power consumption application is possible.

FEATURES

- Object Code Upward Compatible with HD6801 Family
- Abundant On-Chip Functions Compatible with HD6801V0;
  4kB-ROM, 128 Bytes RAM, 29 Parallel I/O Lines, 2 Lines of Data Strobe, 16-bit Timer, Serial Communication Interface.
- Low Power Consumption Mode: Sleep Mode, Standby Mode
- Minimum Instruction Cycle Time
  1μs (f=1MHz), 0.67μs (f=1.5MHz), 0.5μs (f=2MHz)
- Bit Manipulation, Bit Test Instruction
- Protection from System Burst: Address Trap, Op-Code Trap
- Up to 65k Words Address Space
- Wide Operation Range
  V_{CC} = 3 to 6V (f=0.5MHz), f=0.1 to 1.5MHz
  (V_{CC} = 5V ±10%), f = 0.1 to 2.0MHz (V_{CC} = 5V ±5%)

HD6303

- 8-Bit CMOS Microcomputer System for LCD Module Application. Instruction Set compatible with HD6301.
- Multi-Chip Version

FEATURES

- Object Code Upward Compatible with the HD6800, HD6802, HD6801
- Multiplexed Bus ($D_0 \approx D_7/A_0 \approx A_7$)
- Abundant On-Chip Functions Compatible with the HD6301V0: 128Bytes RAM, 13 Parallel I/O Lines (including Timer, SCI I/O Terminals), 16-bit Timer, Serial Communication Interface (SCI)
- Low Power Consumption Mode: Sleep Mode, Stand-By Mode
- Minimum Instruction Cycle Time
  1μs (f=1MHz), 0.67μs (f=1.5MHz), 0.5μs (f=2.0MHz)
- Bit Manipulation, Bit Test Instruction
- Error Detecting Function: Address Trap, Op-Code Trap
- Up to 65k Words Address Space

PIN ARRANGEMENT

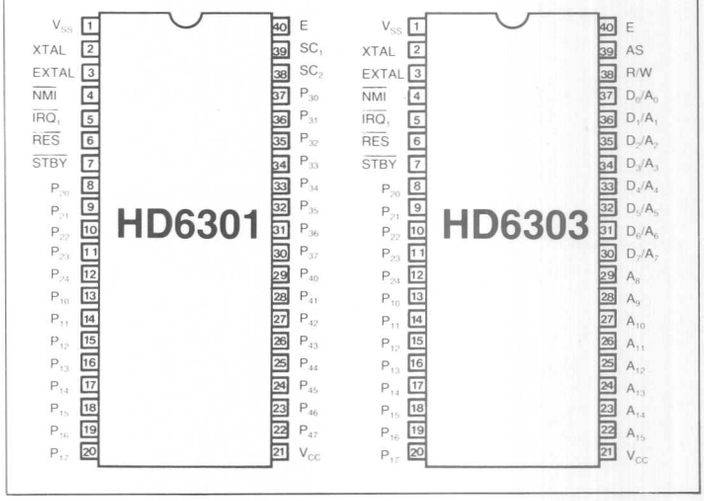

BLOCK DIAGRAM

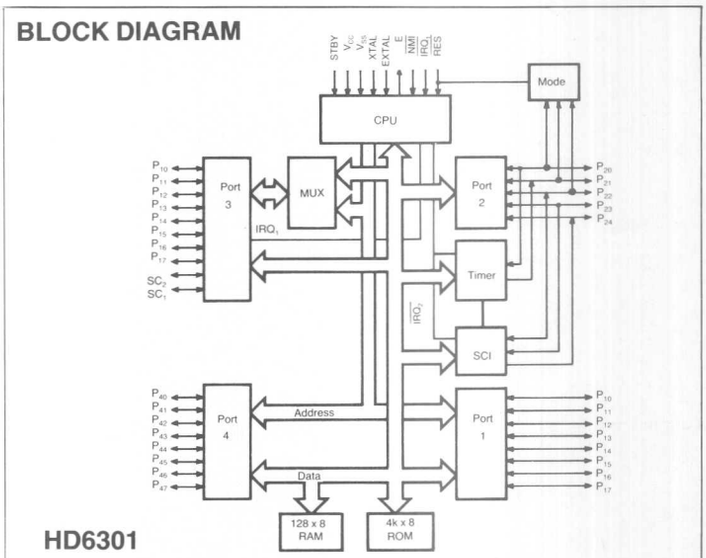

HD6301

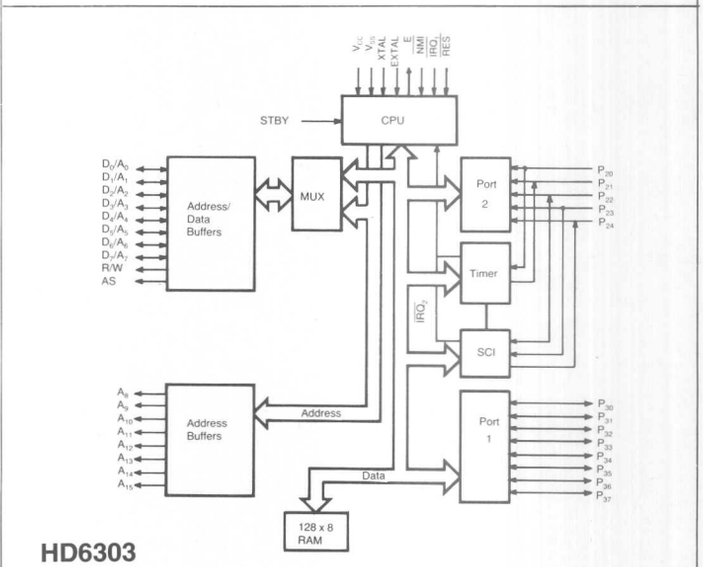

HD6303